BOSS

SE-70 SUPER EFFECTS PROCESSOR

Algorithm Guide

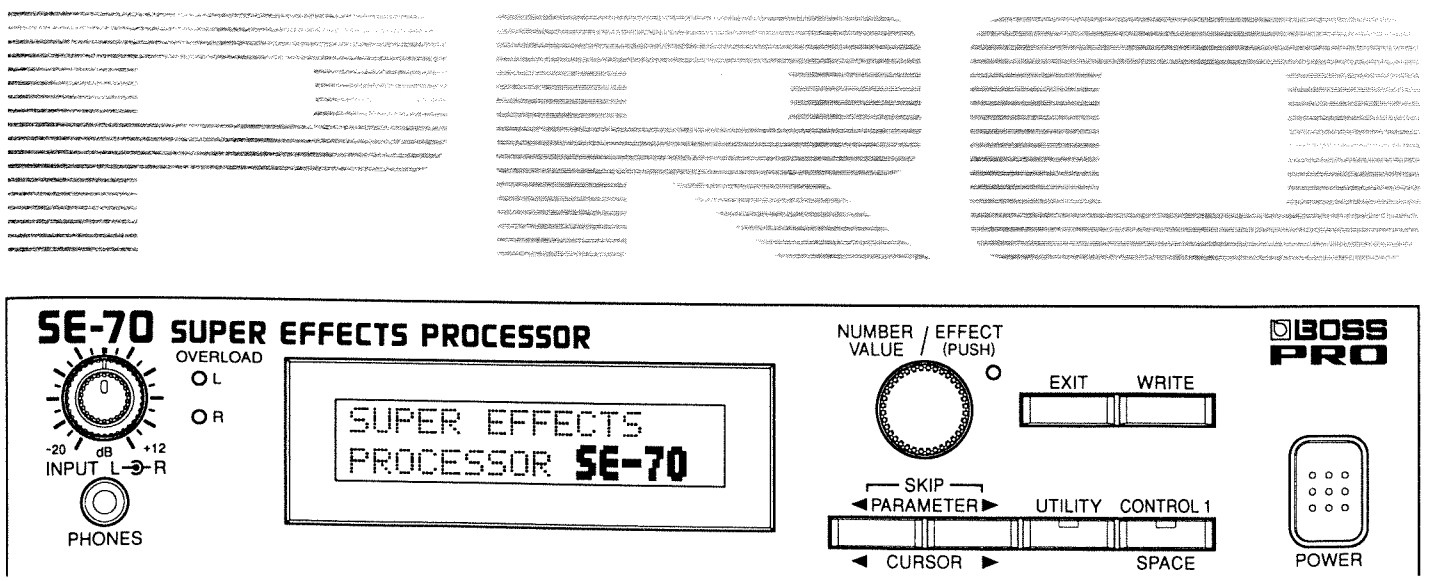

Algorithm Guide

Each algorithm is composed of a selection of effects used in combination. Each of these effects provides a number of parameters (individual elements which create a sound). New sounds can be created by selecting an algorithm and then editing its parameters.
All the algorithms contained within the SE-70 are introduced in the pages that follow. The information is organized to allow you to quickly find information on all the parameters that are available within a given algorithm. By referring to this information you should be able to gain an understanding of how each individual parameter functions in producing the overall effect.

**** Refer to "2Editing Patches" in the Owner's Manual for instructions on how new effects are created.***

The following information pertains to the algorithms in the Preset Area (Patch Numbers 101 to 145):

•Characteristics of the Algorithms

This information should help you to better employ the various algorithms.

•Program Diagrams

These diagrams show how the algorithms are configured. The symbols used are described below.

	Effector
	Parameters for the Same Effect (linked)
→	Audio Signal
⇢	Control Signal

•Parameters

All the parameters that make up an algorithm are listed (including their type and range).

**** Parameters which can be targeted for Real-time Control and MIDI Control are indicated with an asterisk.***

For details on how each parameter functions, refer to "How Each of the Parameters Works" in this manual.

List of Abbreviations Used for Indications in the Display

B	Bass	Inv	Inverse	PS	Pitch Shifter
Bal	Balance	Kb	Keyboard	Rec	Recording
Char	Character	Lev	Level	Rep	Repeat
Cho	Chorus	Lo	Low	Res	Resonance
Comp	Compressor	LPF	Low Pass Filter	Rev	Reverb
Dist	Distortion	LP Filter	Low Pass Filter	S.	Sub
Dly	Delay	M.	Main	Sim	Simulator
DS	Distortion	Mod	Modulation	St	Stereo
Duck	Ducking	NS	Noise Suppressor	SY	Synth
ER	Early Reflection	N Suppressor		Thresh	Threshold
f	Frequency		Noise Suppressor	Trg	Trigger
FB	Feedback	oct	octave	Trig	Trigger
Freq	Frequency	OD	Overdrive	VC	Vocoder
Gt	Guitar	P	Pitch	Vib	Vibrato
Hi	High	P	Pre	Vo	Vocal
HPF	High Pass Filter	Pan	Panning		

CONTENTS

How Each of the Parameters Works

101 Hall

```
101 Hall
------ Hall ------
```

Simulates the reverberation of a hall.

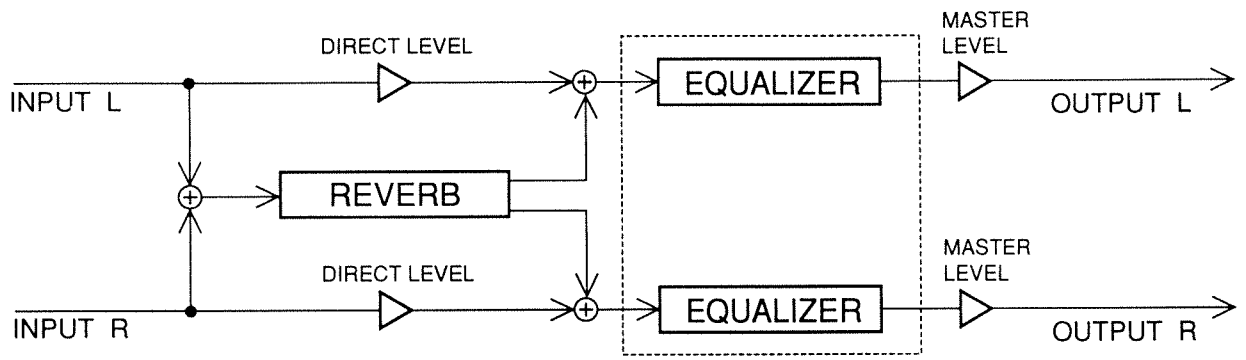

Reverb

Reverb Time	: 0.1 to 60.0s
Pre Delay	: 0 to 300ms
Early Reflection Delay	: 0 to 300ms
Early Reflection Mix Level	: 0 to 100
HF Damp	: -10 to 0
Diffusion	: 0 to 10
Bass	: -12dB to +12dB
Treble	: -12dB to +12dB
Direct Level	: 0 to 100
Effect Level*	: 0 to 100

Equalizer*

Low EQ	: -20dB to +20dB
Low-Mid f	: 100Hz to 10.0kHz
Low-Mid Q	: 0.5 to 16
Low-Mid EQ	: -20dB to +20dB
High-Mid f	: 100Hz to 10.0kHz
High-Mid Q	: 0.5 to 16
High-Mid EQ	: -20dB to +20dB
High EQ	: -20dB to +20dB
Level	: -20dB to +20dB

Master

Level*	: 0 to 100

Assign 1 to 4

Target : For parameters marked with an asterisk, Overall Effect On/Off for the algorithm, Metronome On/Off, Metronome Level, Tuner On/Off

Min : -

Max : -

Source : Control 1 to 3/Exp Pedal/ MIDI After Touch/MIDI Pitch Bend/ MIDI CC#0 to 31, 64 to 119

Assign Mode

Control 1 : Momentary/Latch

Control 1&2/1&3/2/3 : FS-5U Momentary/FS-5U Latch/ FS-5L Latch

MIDI After Touch/MIDI Pitch Bend/ MIDI CC#0 to 31, 64 to 119 : Momentary/Latch

102 Room 1

```
102 Room 1
------ Room 1 ------
```

Simulates the reverberation obtained in a room.

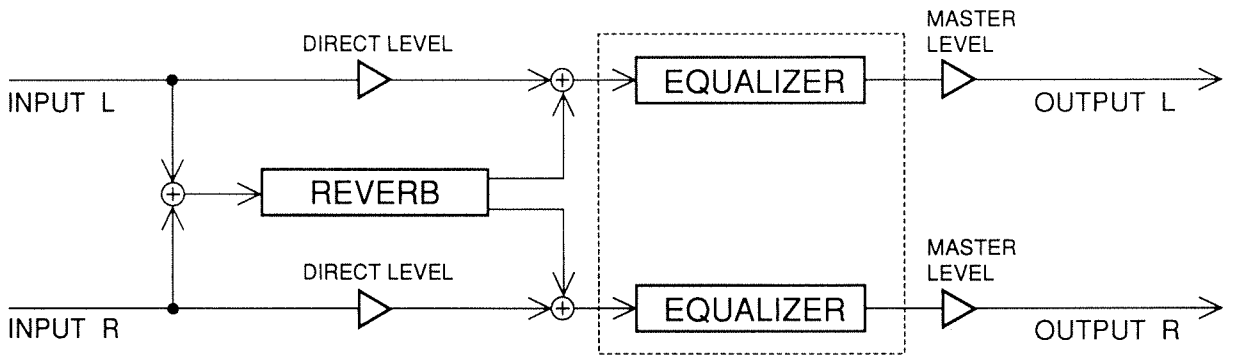

Reverb

Reverb Time	: 0.1 to 60.0s
Pre Delay	: 0 to 300ms
Early Reflection Delay	: 0 to 300ms
Early Reflection Mix Level	: 0 to 100
HF Damp	: -10 to 0
Diffusion	: 0 to 10
Bass	: -12dB to +12dB
Treble	: -12dB to +12dB
Direct Level	: 0 to 100
Effect Level *	: 0 to 100

Equalizer*

Low EQ	: -20dB to +20dB
Low-Mid f	: 100Hz to 10.0kHz
Low-Mid Q	: 0.5 to 16
Low-Mid EQ	: -20dB to +20dB
High-Mid f	: 100Hz to 10.0kHz
High-Mid Q	: 0.5 to 16
High-Mid EQ	: -20dB to +20dB
High EQ	: -20dB to +20dB
Level	: -20dB to +20dB

Master

Level*	: 0 to 100

Assign 1 to 4

Target	: For parameters marked with an asterisk, Overall Effect On/Off for the algorithm, Metronome On/Off, Metronome Level, Tuner On/Off
Min	: -
Max	: -
Source	: Control 1 to 3/Exp Pedal/ MIDI After Touch/MIDI Pitch Bend/ MIDI CC#0 to 31, 64 to 119
Assign Mode	
Control 1	: Momentary/Latch
Control 1&2/1&3/2/3	: FS-5U Momentary/FS-5U Latch/ FS-5L Latch
MIDI After Touch/MIDI Pitch Bend/ MIDI CC#0 to 31, 64 to 119	: Momentary/Latch

103 Room 2

```
103 Room 2
----- Room 2 -----
```

Simulates the reverberation obtained in a room that is smaller than Room 1.

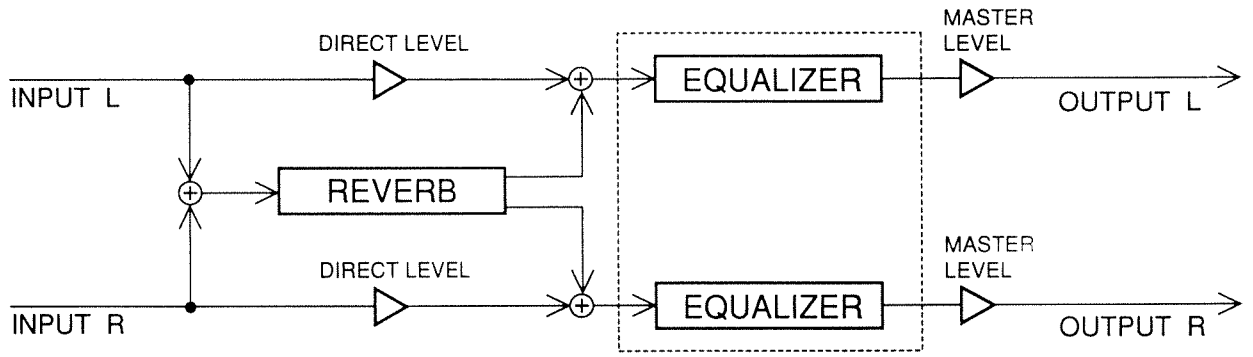

Reverb

Reverb Time	: 0.1 to 5.0s
Pre Delay	: 0 to 300ms
HF Damp	: -10 to 0
Diffusion	: 0 to 10
Density	: 0 to 10
Attack	: 0 to 10
Bass	: -12dB to +12dB
Treble	: -12dB to +12dB
Early Reflection Delay L 1 to 3	: 0 to 300ms
Early Reflection Mix Level L 1 to 3	: 0 to 100
Early Reflection Delay R 1 to 3	: 0 to 300ms
Early Reflection Mix Level R 1 to 3	: 0 to 100
Direct Level	: 0 to 100
Effect Level*	: 0 to 100

Equalizer*

Low EQ	: -20dB to +20dB
Low-Mid f	: 100Hz to 10.0kHz
Low-Mid Q	: 0.5 to 16
Low-Mid EQ	: -20dB to +20dB
High-Mid f	: 100Hz to 10.0kHz
High-Mid Q	: 0.5 to 16
High-Mid EQ	: -20dB to +20dB
High EQ	: -20dB to +20dB
Level	: -20dB to +20dB

Master

Level*	: 0 to 100

Assign 1 to 4

Target	: For parameters marked with an asterisk, Overall Effect On/Off for the algorithm, Metronome On/Off, Metronome Level, Tuner On/Off
Min	: -
Max	: -
Source	: Control 1 to 3/Exp Pedal/ MIDI After Touch/MIDI Pitch Bend/ MIDI CC#0 to 31, 64 to 119
Assign Mode	
Control 1	: Momentary/Latch
Control 1&2/1&3/2/3	: FS-5U Momentary/FS-5U Latch/ FS-5L Latch
MIDI After Touch/MIDI Pitch Bend/ MIDI CC#0 to 31, 64 to 119	: Momentary/Latch

104 Plate

```
104 Plate
------ Plate -----
```

Simulates the sound obtained with a "plate echo." (A unit employing the vibrations of a metal plate to produce reverb.) Provides a metallic luster.

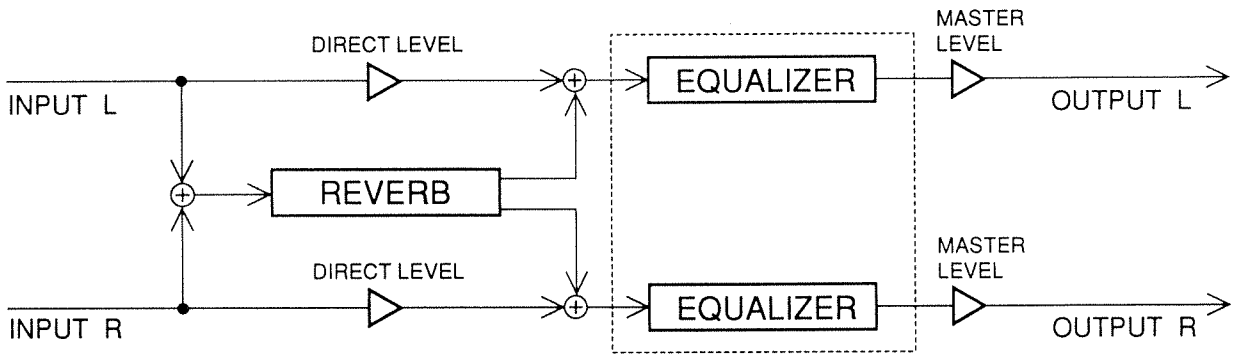

Reverb

Reverb Time	: 0.1 to 60.0s
Pre Delay	: 0 to 300ms
HF Damp	: -10 to 0
Diffusion	: 0 to 10
Bass	: -12dB to +12dB
Treble	: -12dB to +12dB
Direct Level	: 0 to 100
Effect Level*	: 0 to 100

Equalizer*

Low EQ	: -20dB to +20dB
Low-Mid f	: 100Hz to 10.0kHz
Low-Mid Q	: 0.5 to 16
Low-Mid EQ	: -20dB to +20dB
High-Mid f	: 100Hz to 10.0kHz
High-Mid Q	: 0.5 to 16
High-Mid EQ	: -20dB to +20dB
High EQ	: -20dB to +20dB
Level	: -20dB to +20dB

Master

Level*	: 0 to 100

Assign 1 to 4

Target	: For parameters marked with an asterisk, Overall Effect On/Off for the algorithm, Metronome On/Off, Metronome Level, Tuner On/Off
Min	: -
Max	: -
Source	: Control 1 to 3/Exp Pedal/ MIDI After Touch/MIDI Pitch Bend/ MIDI CC#0 to 31, 64 to 119
Assign Mode	
Control 1	: Momentary/Latch
Control 1&2/1&3/2/3	: FS-5U Momentary/FS-5U Latch/ FS-5L Latch
MIDI After Touch/MIDI Pitch Bend/ MIDI CC#0 to 31, 64 to 119	: Momentary/Latch

105 Stereo Reverb

```
105 St. Reverb
---- St. Reverb --
```

A reverb that is processed in stereo.

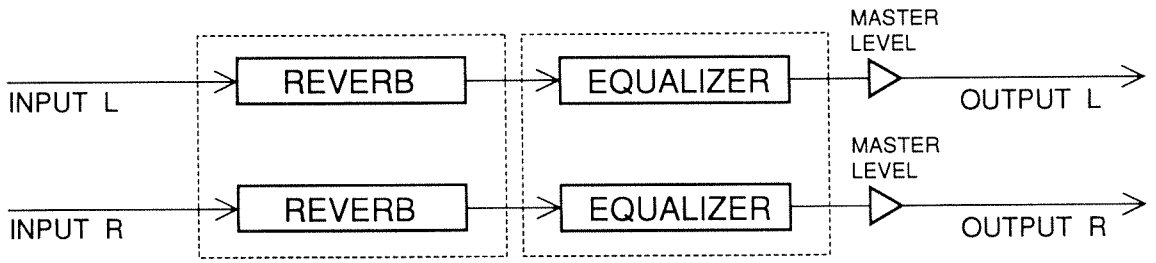

Reverb

Reverb Time	: 0.1 to 20.0sec
Pre Delay	: 0 to 100ms
HP FILTER	: Thru to 800Hz
LP FILTER	: 500Hz to Thru
Direct Level	: 0 to 100
Effect Level*	: 0 to 100

Equalizer*

Low EQ	: -20dB to +20dB
Low-Mid f	: 100Hz to 10.0kHz
Low-Mid Q	: 0.5 to 16
Low-Mid EQ	: -20dB to +20dB
High-Mid f	: 100Hz to 10.0kHz
High-Mid Q	: 0.5 to 16
High-Mid EQ	: -20dB to +20dB
High EQ	: -20dB to +20dB
Level	: -20dB to +20dB

Master

Level*	: 0 to 100

Assign 1 to 4

Target : For parameters marked with an asterisk, Overall Effect On/Off for the algorithm, Metronome On/Off, Metronome Level, Tuner On/Off

Min : -

Max : -

Source : Control 1 to 3/Exp Pedal/ MIDI After Touch/MIDI Pitch Bend/ MIDI CC#0 to 31, 64 to 119

Assign Mode

Control 1 : Momentary/Latch

Control 1&2/1&3/2/3 : FS-5U Momentary/FS-5U Latch/ FS-5L Latch

MIDI After Touch/MIDI Pitch Bend/ MIDI CC#0 to 31, 64 to 119 : Momentary/Latch

106 Gate Reverb

```
106 Gate Reverb
-- Gate Reverb -
```

A reverb that is muted part way through. Provides total stereo processing. This effect can be made even more unique by adding Accent Delay, Accent Level.

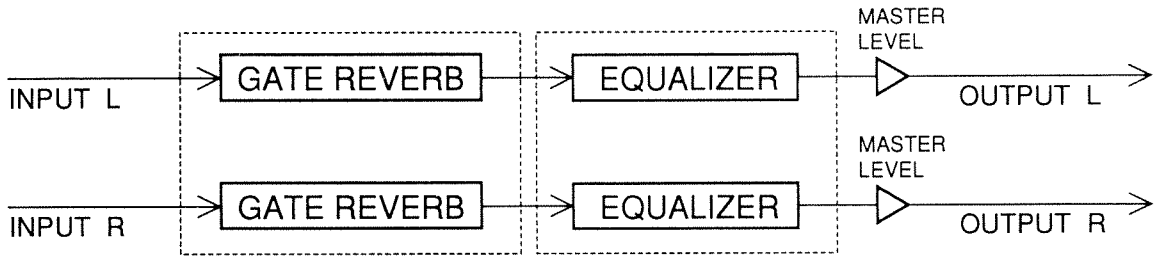

Gate Reverb

Gate Time	: 10 to 400ms
Pre Delay	: 0 to 300ms
Mode	: Normal/ Left→Right/Right→Left/ Reverse 1/Reverse 2
Thickness	: 0 to 10
Density	: 0 to 10
Accent Delay	: 0 to 200ms
Accent Level	: 0 to 100
Bass	: -12dB to +12dB
Treble	: -12dB to +12dB
Direct Level	: 0 to 100
Effect Level*	: 0 to 100

Equalizer*

Low EQ	: -20dB to +20dB
Low-Mid f	: 100Hz to 10.0kHz
Low-Mid Q	: 0.5 to 16
Low-Mid EQ	: -20dB to +20dB
High-Mid f	: 100Hz to 10.0kHz
High-Mid Q	: 0.5 to 16
High-Mid EQ	: -20dB to +20dB
High EQ	: -20dB to +20dB
Level	: -20dB to +20dB

Master

Level*	: 0 to 100

Assign 1 to 4

Target	: For parameters marked with an asterisk, Overall Effect On/Off for the algorithm, Metronome On/Off, Metronome Level, Tuner On/Off
Min	: -
Max	: -
Source	: Control 1 to 3/Exp Pedal/ MIDI After Touch/MIDI Pitch Bend/ MIDI CC#0 to 31, 64 to 119
Assign Mode	
Control 1	: Momentary/Latch
Control 1&2/1&3/2/3	: FS-5U Momentary/FS-5U Latch/ FS-5L Latch
MIDI After Touch/MIDI Pitch Bend/ MIDI CC#0 to 31, 64 to 119	: Momentary/Latch

107 Ambiance

```
107 Ambience
--- Ambience ---
```

Simulates the effect obtained when using an "ambiance microphone." (A microphone used during recording that is placed at a distance from the sound source.) Provides a sense of spaciousness and depth similar to that obtained with reverb.

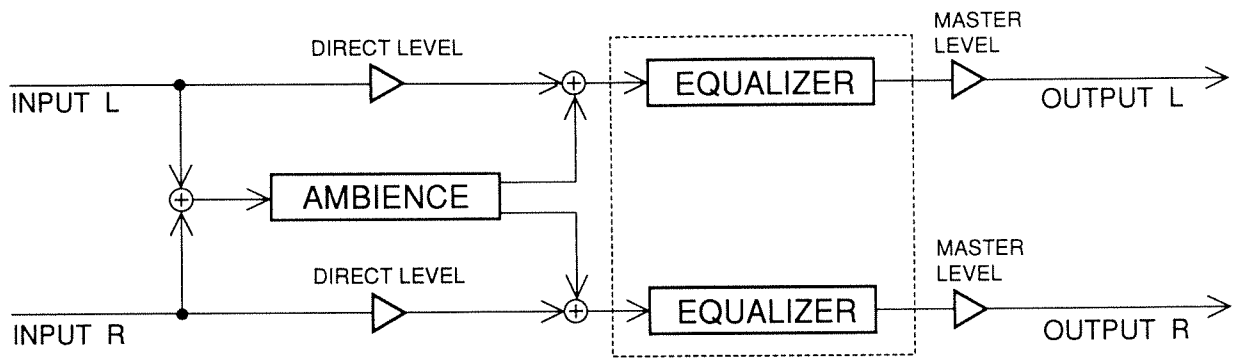

Ambience

Pre Delay	: 0 to 200ms
Early Reflection Delay	: 0 to 200ms
Early Reflection Mix Level	: 0 to 100
Diffusion	: 0 to 10
Bass	: -12dB to +12dB
Treble	: -12dB to +12dB
Direct Level	: 0 to 100
Effect Level*	: 0 to 100

Equalizer*

Low EQ	: -20dB to +20dB
Low-Mid f	: 100Hz to 10.0kHz
Low-Mid Q	: 0.5 to 16
Low-Mid EQ	: -20dB to +20dB
High-Mid f	: 100Hz to 10.0kHz
High-Mid Q	: 0.5 to 16
High-Mid EQ	: -20dB to +20dB
High EQ	: -20dB to +20dB

Master

Level*	: 0 to 100

Assign 1 to 4

Target : For parameters marked with an asterisk, Overall Effect On/Off for the algorithm, Metronome On/Off, Metronome Level, Tuner On/Off

Min : -

Max : -

Source : Control 1 to 3/Exp Pedal/ MIDI After Touch/MIDI Pitch Bend/ MIDI CC#0 to 31, 64 to 119

Assign Mode

Control 1 : Momentary/Latch

Control 1&2/1&3/2/3 : FS-5U Momentary/FS-5U Latch/ FS-5L Latch

MIDI After Touch/MIDI Pitch Bend/ MIDI CC#0 to 31, 64 to 119 : Momentary/Latch

108 Simple Delay

```
108 Simple Delay
- Simple Delay -
```

A conventional delay. The number of parameters used has been kept to a minimum to make it easy to use.

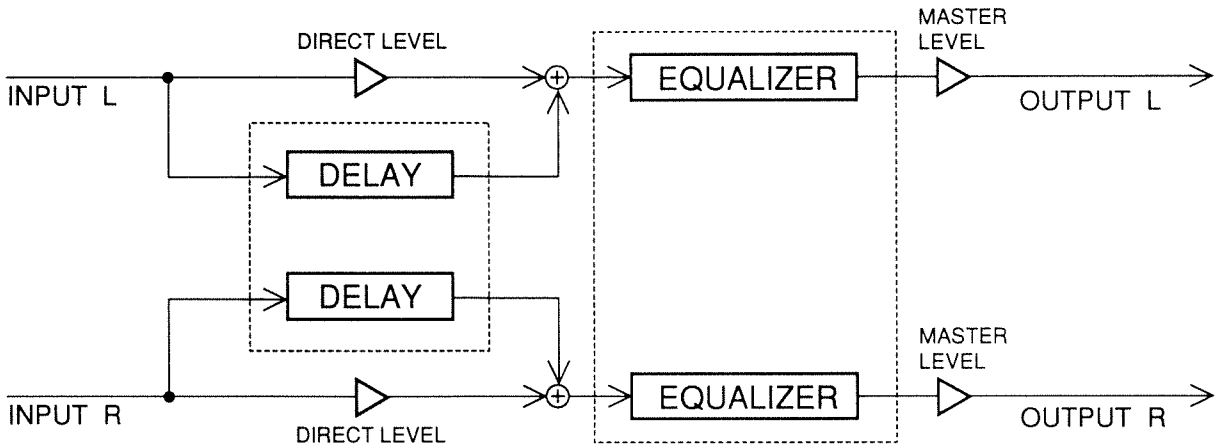

Delay

Delay Time	: 0 to 680ms
Feedback	: 0 to 100
HF Damp	: -10 to 0
LF Damp	: -10 to 0
Direct Level	: 0 to 100
Effect Level*	: 0 to 100

Equalizer*

Low EQ	: -20dB to +20dB
Low-Mid f	: 100Hz to 10.0kHz
Low-Mid Q	: 0.5 to 16
Low-Mid EQ	: -20dB to +20dB
High-Mid f	: 100Hz to 10.0kHz
High-Mid Q	: 0.5 to 16
High-Mid EQ	: -20dB to +20dB
High EQ	: -20dB to +20dB
Level	: -20dB to +20dB

Master

Level*	: 0 to 100

Assign 1 to 4

Target : For parameters marked with an asterisk, Overall Effect On/Off for the algorithm, Metronome On/Off, Metronome Level, Tuner On/Off

Min : -

Max : -

Source : Control 1 to 3/Exp Pedal/ MIDI After Touch/MIDI Pitch Bend/ MIDI CC#0 to 31, 64 to 119

Assign Mode

Control 1 : Momentary/Latch

Control 1&2/1&3/2/3 : FS-5U Momentary/FS-5U Latch/ FS-5L Latch

MIDI After Touch/MIDI Pitch Bend/ MIDI CC#0 to 31, 64 to 119 : Momentary/Latch

109 Mono Delay

```
109 Mono Delay
-- Mono Delay --
```

A conventional long delay.

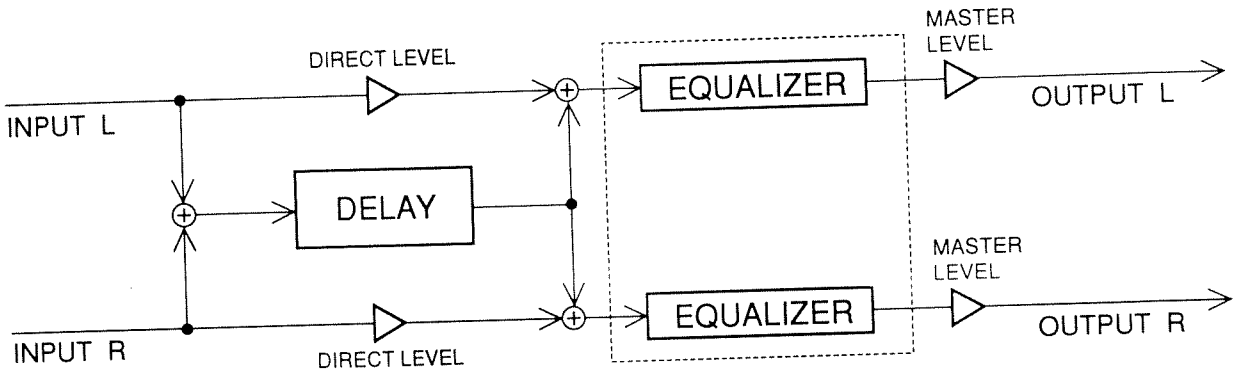

Delay

Delay Time	: 0 to 2000ms
Feedback	: 0 to 100
HF Damp	: -10 to 0
LF Damp	: -10 to 0
Bass	: -12dB to +12dB
Treble	: -12dB to +12dB
Direct Level	: 0 to 100
Effect Level*	: 0 to 100

Equalizer*

Low EQ	: -20dB to +20dB
Low-Mid f	: 100Hz to 10.0kHz
Low-Mid Q	: 0.5 to 16
Low-Mid EQ	: -20dB to +20dB
High-Mid f	: 100Hz to 10.0kHz
High-Mid Q	: 0.5 to 16
High-Mid EQ	: -20dB to +20dB
High EQ	: -20dB to +20dB
Level	: -20dB to +20dB

Master

Level*	: 0 to 100

Assign 1 to 4

Target : For parameters marked with an asterisk, Overall Effect On/Off for the algorithm, Metronome On/Off, Metronome Level, Tuner On/Off

Min : -

Max : -

Source : Control 1 to 3/Exp Pedal/ MIDI After Touch/MIDI Pitch Bend/ MIDI CC#0 to 31, 64 to 119

Assign Mode

Control 1 : Momentary/Latch

Control 1&2/1&3/2/3 : FS-5U Momentary/FS-5U Latch/ FS-5L Latch

MIDI After Touch/MIDI Pitch Bend/ MIDI CC#0 to 31, 64 to 119 : Momentary/Latch

110 Modulation Delay

```
110 Mod Delay
---- Mod Delay ---
```

A delay which allows "modulation" (change) to be applied to the delayed sound.

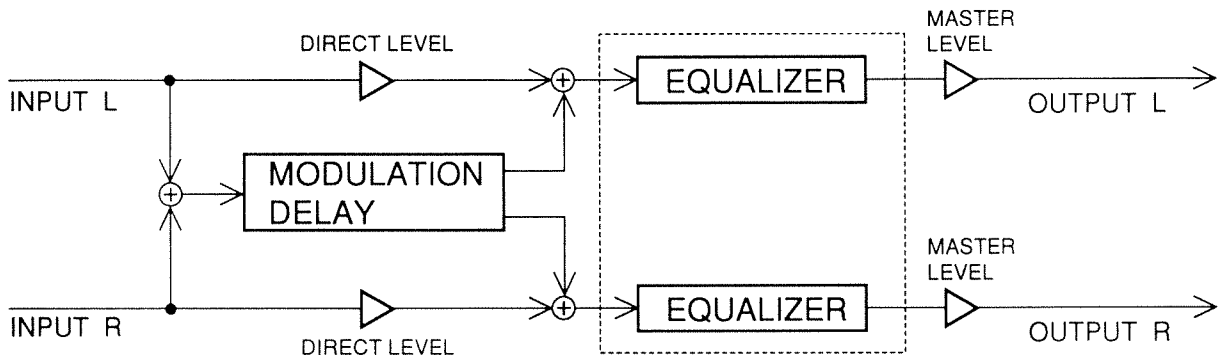

Delay

Delay Time	: 0 to 1600ms
Feedback	: 0 to 100
Modulation Wave	: Tri/Sin
Rate*	: 0 to 100
Depth	: 0 to 100
Polarity	: Inverse/Synchro
HF Damp	: -10 to 0
LF Damp	: -10 to 0
Bass	: -12dB to +12dB
Treble	: -12dB to +12dB
Direct Level	: 0 to 100
Effect Level*	: 0 to 100

Equalizer*

Low EQ	: -20dB to +20dB
Low-Mid f	: 100Hz to 10.0kHz
Low-Mid Q	: 0.5 to 16
Low-Mid EQ	: -20dB to +20dB
High-Mid f	: 100Hz to 10.0kHz
High-Mid Q	: 0.5 to 16
High-Mid EQ	: -20dB to +20dB
High EQ	: -20dB to +20dB
Level	: -20dB to +20dB

Master

Level*	: 0 to 100

Assign 1 to 4

Target	: For parameters marked with an asterisk, Overall Effect On/Off for the algorithm, Metronome On/Off, Metronome Level, Tuner On/Off
Min	: -
Max	: -
Source	: Control 1 to 3/Exp Pedal/ MIDI After Touch/MIDI Pitch Bend/ MIDI CC#0 to 31, 64 to 119
Assign Mode	
Control 1	: Momentary/Latch
Control 1&2/1&3/2/3	: FS-5U Momentary/FS-5U Latch/ FS-5L Latch
MIDI After Touch/MIDI Pitch Bend/ MIDI CC#0 to 31, 64 to 119	: Momentary/Latch

111 Stereo Delay

111 Stereo Delay
- Stereo Delay -

A delay which allows settings to be made independently for both the left and right channels.

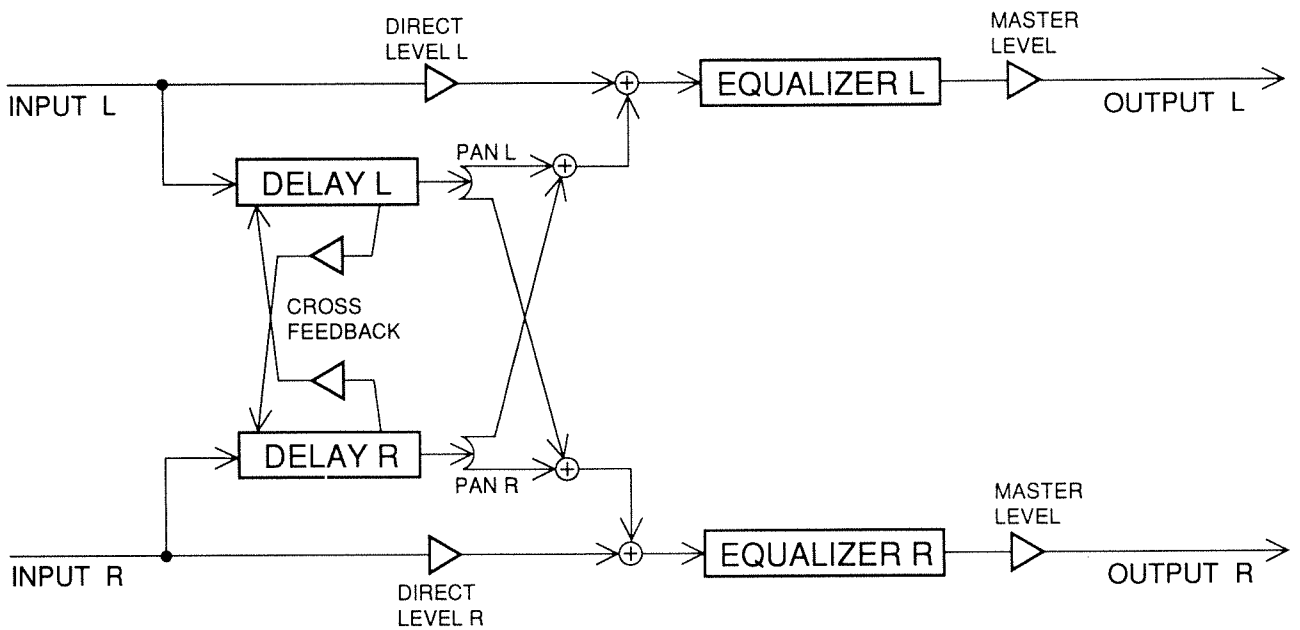

Delay

Delay Time L	: 0 to 1000ms
Feedback L	: 0 to 100
HF Damp L	: -10 to 0
LF Damp L	: -10 to 0
Bass L	: -12dB to +12dB
Treble L	: -12dB to +12dB
Pan L*	: L100 R0 to L0 R100
Direct Level L	: 0 to 100
Effect Level L*	: 0 to 100
Delay Time R	: 0 to 1000ms
Feedback R	: 0 to 100
HF Damp R	: -10 to 0
LF Damp R	: -10 to 0
Bass R	: -12dB to +12dB
Treble R	: -12dB to +12dB
Pan R*	: L100 R0 to L0 R100
Direct Level R	: 0 to 100
Effect Level R*	: 0 to 100
Cross Feedback	: 0 to 100

Equalizer L*

Low EQ	: -20dB to +20dB
Low-Mid f	: 100Hz to 10.0kHz
Low-Mid Q	: 0.5 to 16
Low-Mid EQ	: -20dB to +20dB
High-Mid f	: 100Hz to 10.0kHz
High-Mid Q	: 0.5 to 16
High-Mid EQ	: -20dB to +20dB
High EQ	: -20dB to +20dB
Level	: -20dB to +20dB

Equalizer R*

Low EQ	: -20dB to +20dB
Low-Mid f	: 100Hz to 10.0kHz
Low-Mid Q	: 0.5 to 16
Low-Mid EQ	: -20dB to +20dB
High-Mid f	: 100Hz to 10.0kHz
High-Mid Q	: 0.5 to 16
High-Mid EQ	: -20dB to +20dB
High EQ	: -20dB to +20dB
Level	: -20dB to +20dB

Master

Level*	: 0 to 100

Assign 1 to 4

Target : For parameters marked with an asterisk, Overall Effect On/Off for the algorithm, Metronome On/Off, Metronome Level, Tuner On/Off

Min : -

Max : -

Source : Control 1 to 3/Exp Pedal/ MIDI After Touch/MIDI Pitch Bend/ MIDI CC#0 to 31, 64 to 119

Assign Mode

Control 1 : Momentary/Latch

Control 1&2/1&3/2/3 : FS-5U Momentary/FS-5U Latch/ FS-5L Latch

MIDI After Touch/MIDI Pitch Bend/ MIDI CC#0 to 31, 64 to 119 : Momentary/Latch

112 20Tap Delay

```
112 20Tap Delay
--- 20Tap Delay -
```

A delay which allows independent settings to be made for 20 separate repeats.

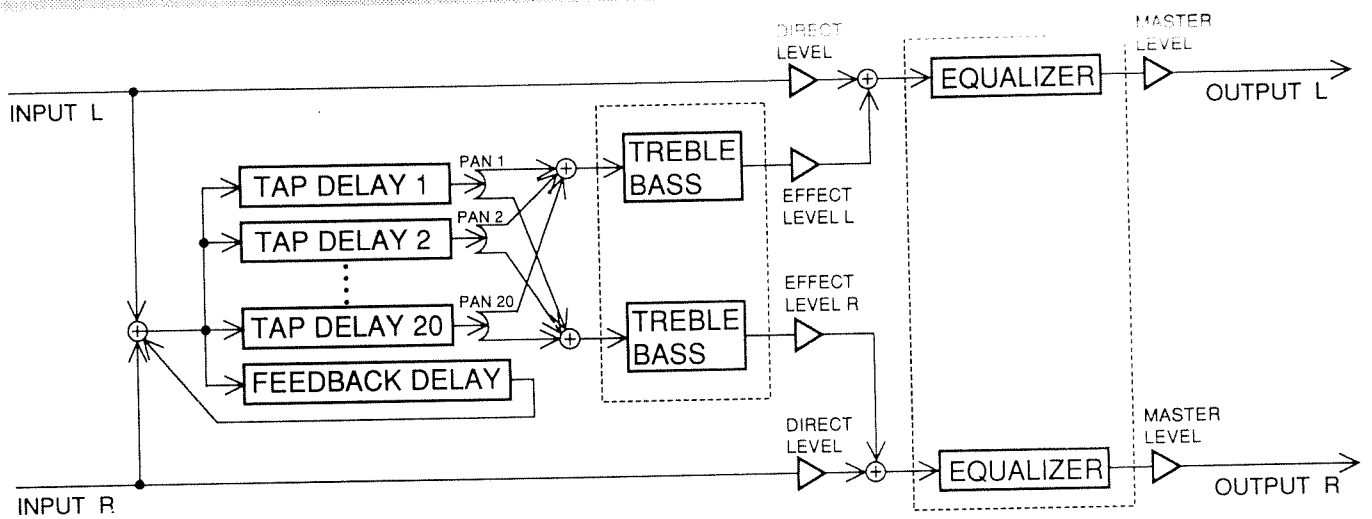

Delay

Delay Time 1 to 20	: 0 to 2000ms
Pan 1 to 20	: L100 R0 to L0 R100
Tap Level 1 to 20	: 0 to 100
Feedback Delay	: 0 to 2000ms
Feedback Level	: 0 to 100
Bass	: -12dB to +12dB
Treble	: -12dB to +12dB
Direct Level	: 0 to 100
Effect Level L*	: 0 to 100
Effect Level R*	: 0 to 100

Equalizer*

Low EQ	: -20dB to +20dB
Low-Mid f	: 100Hz to 10.0kHz
Low-Mid Q	: 0.5 to 16
Low-Mid EQ	: -20dB to +20dB
High-Mid f	: 100Hz to 10.0kHz
High-Mid Q	: 0.5 to 16
High-Mid EQ	: -20dB to +20dB
High EQ	: -20dB to +20dB
Level	: -20dB to +20dB

Master

Level*	: 0 to 100

Assign 1 to 4

Target : For parameters marked with an asterisk, Overall Effect On/Off for the algorithm, Metronome On/Off, Metronome Level, Tuner On/Off

Min : -

Max : -

Source : Control 1 to 3/Exp Pedal/ MIDI After Touch/MIDI Pitch Bend/ MIDI CC#0 to 31, 64 to 119

Assign Mode

Control 1 : Momentary/Latch

Control 1&2/1&3/2/3 : FS-5U Momentary/FS-5U Latch/ FS-5L Latch

MIDI After Touch/MIDI Pitch Bend/ MIDI CC#0 to 31, 64 to 119 : Momentary/Latch

113 Stereo Chorus

```
113 St. Chorus
---- St. Chorus ---
```

Adds fatness and a sense of expansiveness to the sound.

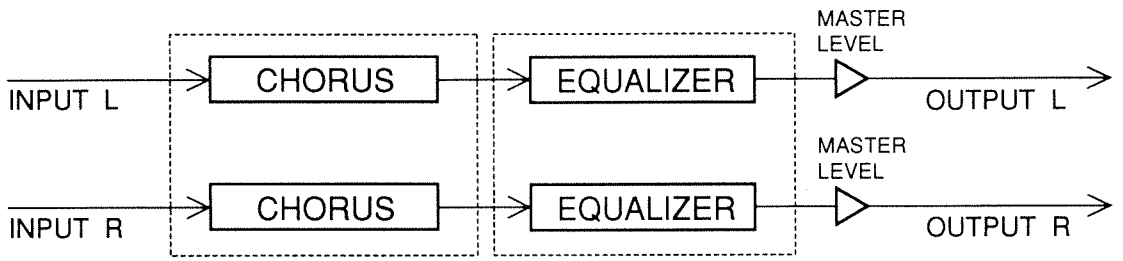

Chorus

Rate*	: 0 to 100
Depth	: 0 to 100
Pre Delay	: 0 to 500.0ms
Bass	: -12dB to +12dB
Treble	: -12dB to +12dB
Direct Level	: 0 to 100
Effect Level	: 0 to 100

Equalizer*

Low EQ	: -20dB to +20dB
Low-Mid f	: 100Hz to 10.0kHz
Low-Mid Q	: 0.5 to 16
Low-Mid EQ	: -20dB to +20dB
High-Mid f	: 100Hz to 10.0kHz
High-Mid Q	: 0.5 to 16
High-Mid EQ	: -20dB to +20dB
High EQ	: -20dB to +20dB
Level	: -20dB to +20dB

Master

Level*	: 0 to 100

Assign 1 to 4

Target	: For parameters marked with an asterisk, Overall Effect On/Off for the algorithm, Metronome On/Off, Metronome Level, Tuner On/Off
Min	: -
Max	: -
Source	: Control 1 to 3/Exp Pedal/ MIDI After Touch/MIDI Pitch Bend/ MIDI CC#0 to 31, 64 to 119
Assign Mode	
Control 1	: Momentary/Latch
Control 1&2/1&3/2/3	: FS-5U Momentary/FS-5U Latch/ FS-5L Latch
MIDI After Touch/MIDI Pitch Bend/ MIDI CC#0 to 31, 64 to 119	: Momentary/Latch

114 Band Chorus

```
114 Band Chorus
-- Band Chorus -
```

This chorus divides the sound into two bands (frequency ranges), and allows different settings to be made for each band.

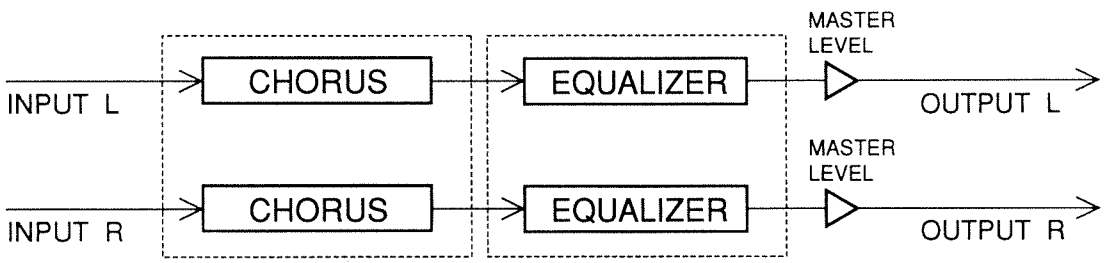

Chorus

Crossover f	: 315Hz/400Hz/500Hz/ 630Hz/800Hz/1.00kHz/ 1.25KHz/1.60kHz/2.00kHz
Low Rate*	: 0 to 100
Low Depth	: 0 to 100
Low Pre Delay	: 0 to 500.0ms
Low Level	: 0 to 100
High Rate*	: 0 to 100
High Depth	: 0 to 100
High Pre Delay	: 0 to 500.0ms
High Level	: 0 to 100
Bass	: -12dB to +12dB
Treble	: -12dB to +12dB
Direct Level	: 0 to 100

Equalizer*

Low EQ	: -20dB to +20dB
Low-Mid f	: 100Hz to 10.0kHz
Low-Mid Q	: 0.5 to 16
Low-Mid EQ	: -20dB to +20dB
High-Mid f	: 100Hz to 10.0kHz
High-Mid Q	: 0.5 to 16
High-Mid EQ	: -20dB to +20dB
High EQ	: -20dB to +20dB
Level	: -20dB to +20dB

Master

Level*	: 0 to 100

Assign 1 to 4

Target	: For parameters marked with an asterisk, Overall Effect On/Off for the algorithm, Metronome On/Off, Metronome Level, Tuner On/Off
Min	: -
Max	: -
Source	: Control 1 to 3/Exp Pedal/ MIDI After Touch/MIDI Pitch Bend/ MIDI CC#0 to 31, 64 to 119
Assign Mode	
Control 1	: Momentary/Latch
Control 1&2/1&3/2/3	: FS-5U Momentary/FS-5U Latch/ FS-5L Latch
MIDI After Touch/MIDI Pitch Bend/ MIDI CC#0 to 31, 64 to 119	: Momentary/Latch

115 Wave Chorus

```
115 Wave Chorus
-- Wave Chorus -
```

Allows a wide range of different choruses to be obtained by mixing in the LFO that determines the chorus effect.

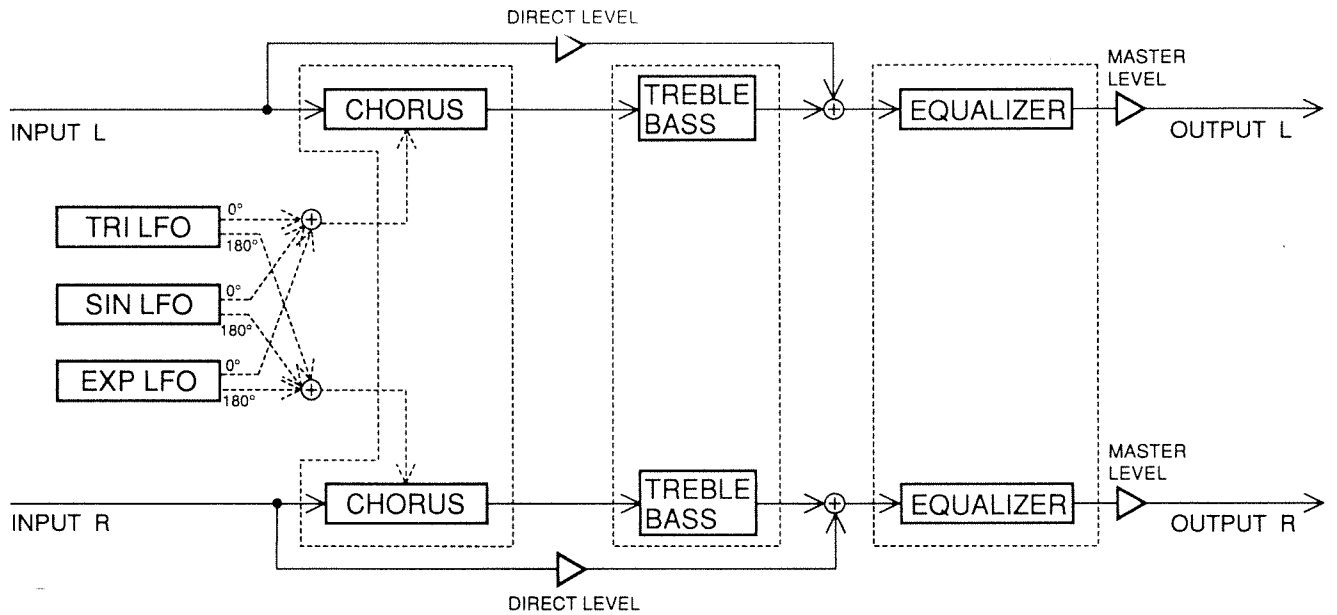

Chorus

Tri Rate*	: 0 to 100
Tri Depth	: 0 to 100
Sin Rate*	: 0 to 100
Sin Depth	: 0 to 100
Exp Rate*	: 0 to 100
Exp Depth	: 0 to 100
Pre Delay	: 0 to 500.0ms
Bass	: -12dB to +12dB
Treble	: -12dB to +12dB
Direct Level	: 0 to 100
Effect Level	: 0 to 100

Equalizer*

Low EQ	: -20dB to +20dB
Low-Mid f	: 100Hz to 10.0kHz
Low-Mid Q	: 0.5 to 16
Low-Mid EQ	: -20dB to +20dB
High-Mid f	: 100Hz to 10.0kHz
High-Mid Q	: 0.5 to 16
High-Mid EQ	: -20dB to +20dB
High EQ	: -20dB to +20dB
Level	: -20dB to +20dB

Master

Level*	: 0 to 100

Assign 1 to 4

Target	: For parameters marked with an asterisk, Overall Effect On/Off for the algorithm, Metronome On/Off, Metronome Level, Tuner On/Off
Min	: -
Max	: -
Source	: Control 1 to 3/Exp Pedal/ MIDI After Touch/MIDI Pitch Bend/ MIDI CC#0 to 31, 64 to 119
Assign Mode	
Control 1	: Momentary/Latch
Control 1&2/1&3/2/3	: FS-5U Momentary/FS-5U Latch/ FS-5L Latch
MIDI After Touch/MIDI Pitch Bend/ MIDI CC#0 to 31, 64 to 119	: Momentary/Latch

116 Super Chorus

```
116 Super Chorus
- Super Chorus -
```

This super chorus can simulate up to 16 chorus units.

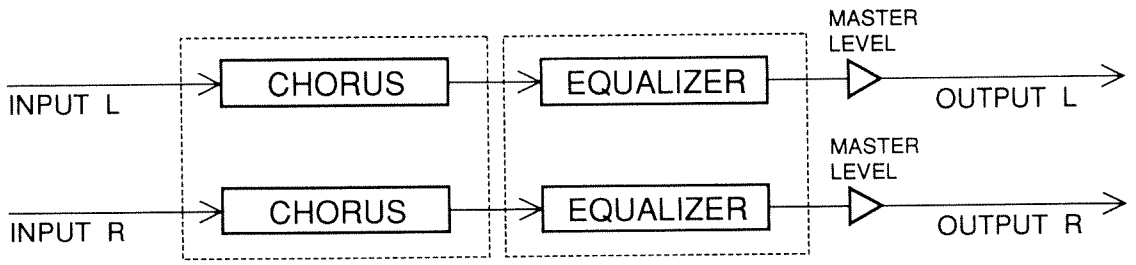

Chorus

Rate*	: 0 to 100
Mode	: 2Stage/4Stage/8Stage/ 16Stage/16Manual
<2/4/8/16Stage>	
Depth	: 0 to 100
Pre Delay	: 0.0 to 500ms
<16Manual>	
Depth 1 to 8	: 0 to 100
Pre Delay 1 to 8	: 0.0 to 500ms
Bass	: -12dB to +12dB
Treble	: -12dB to +12dB
Direct Level	: 0 to 100
Effect Level	: 0 to 100

Equalizer*

Low EQ	: -20dB to +20dB
Low-Mid f	: 100Hz to 10.0kHz
Low-Mid Q	: 0.5 to 16
Low-Mid EQ	: -20dB to +20dB
High-Mid f	: 100Hz to 10.0kHz
High-Mid Q	: 0.5 to 16
High-Mid EQ	: -20dB to +20dB
High EQ	: -20dB to +20dB
Level	: -20dB to +20dB

Master

Level*	: 0 to 100

Assign 1 to 4

Target	: For parameters marked with an asterisk, Overall Effect On/Off for the algorithm, Metronome On/Off, Metronome Level, Tuner On/Off
Min	: -
Max	: -
Source	: Control 1 to 3/Exp Pedal/ MIDI After Touch/MIDI Pitch Bend/ MIDI CC#0 to 31, 64 to 119
Assign Mode	
Control 1	: Momentary/Latch
Control 1&2/1&3/2/3	: FS-5U Momentary/FS-5U Latch/ FS-5L Latch
MIDI After Touch/MIDI Pitch Bend/ MIDI CC#0 to 31, 64 to 119	: Momentary/Latch

117 Pitch Shift

```
117 Pitch Shift
-- Pitch Shift -
```

This Pitch Sifter can generate 12 pitches from a single input source.

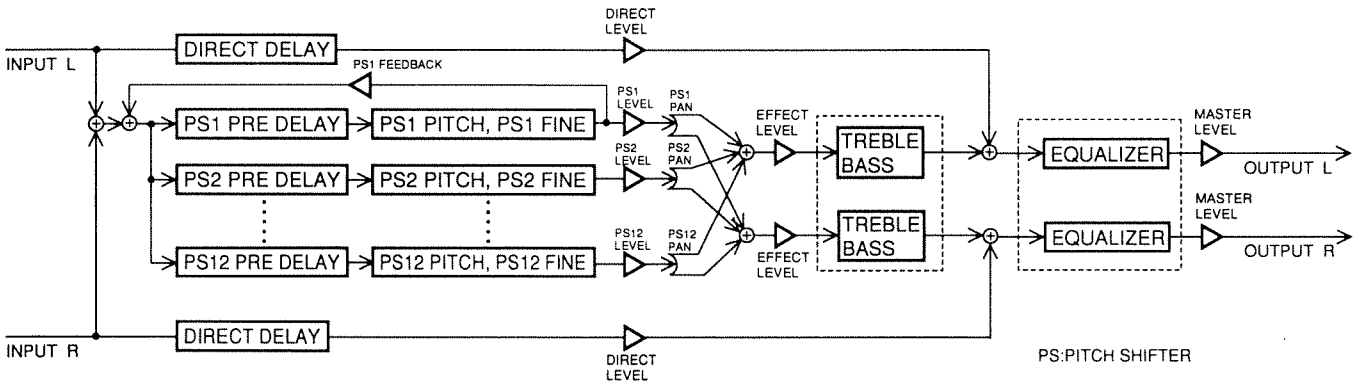

Pitch Shifter

Voice	: 1 to 12
Pitch Shifter 1 to 12 Mode	: 1/2/3/4/5/Inv1/Inv2
Pitch Shifter 1 to 12 Pitch*	: -24 to +24
Pitch Shifter 1 to 12 Fine	: -50 to +50
Pitch Shifter 1 to 12 Pre Delay	: 0 to 1500ms
Pitch Shifter 1 Feedback	: 0 to 100
Pitch Shifter 1 to 12 Pan	: L100 R0 to L0 R100
Pitch Shifter 1 to 12 Level	: 0 to 100
Bass	: -12dB to +12dB
Treble	: -12dB to +12dB
Direct Delay	: 0 to 15ms
Direct Level	: 0 to 100
Effect Level*	: 0 to 100

Equalizer*

Low EQ	: -20dB to +20dB
Low-Mid f	: 100Hz to 10.0kHz
Low-Mid Q	: 0.5 to 16
Low-Mid EQ	: -20dB to +20dB
High-Mid f	: 100Hz to 10.0kHz
High-Mid Q	: 0.5 to 16
High-Mid EQ	: -20dB to +20dB
High EQ	: -20dB to +20dB
Level	: -20dB to +20dB

Master

Level*	: 0 to 100

Assign 1 to 4

Target : For parameters marked with an asterisk, Overall Effect On/Off for the algorithm, Metronome On/Off, Metronome Level, Tuner On/Off

Min : -

Max : -

Source : Control 1 to 3/Exp Pedal/ MIDI After Touch/MIDI Pitch Bend/ MIDI CC#0 to 31, 64 to 119

Assign Mode

Control 1 : Momentary/Latch

Control 1&2/1&3/2/3 : FS-5U Momentary/FS-5U Latch/ FS-5L Latch

MIDI After Touch/MIDI Pitch Bend/ MIDI CC#0 to 31, 64 to 119 : Momentary/Latch

118 Stereo Pitch Shift

```
118 St. P Shift
--- St. P Shift ---
```

This pitch shifter supports stereo processing.

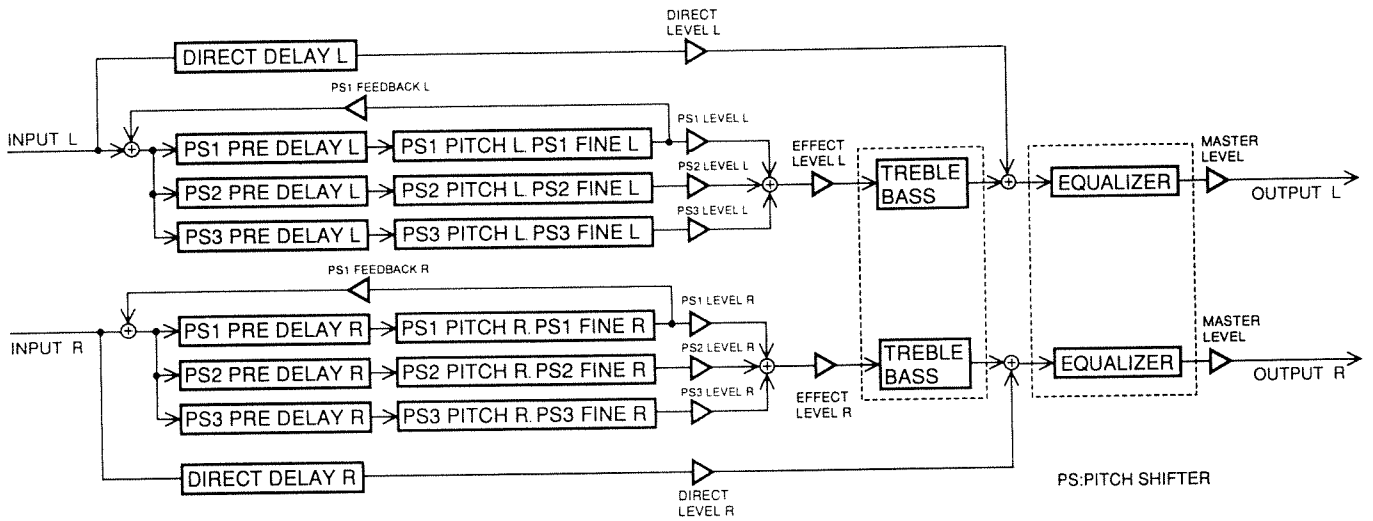

Pitch Shifter

Stereo Link	: On/Off
Pitch Shifter 1 to 3 Mode L	: 1/2/3/4/5/ Inv1/Inv2
Pitch Shifter 1 to 3 Pitch L*	: -24 to +24
Pitch Shifter 1 to 3 Fine L	: -50 to +50
Pitch Shifter 1 to 3 Pre Delay L	: 0 to 320ms
Pitch Shifter 1 Feedback L	: 0 to 100
Pitch Shifter 1 to 3 Level L	: 0 to 100
Effect Level L*	: 0 to 100
Direct Delay L	: 0 to 20ms
Direct Level L	: 0 to 100
Pitch Shifter 1 to 3 Mode R	: 1/2/3/4/5/ Inv1/Inv2
Pitch Shifter 1 to 3 Pitch R*	: -24 to +24
Pitch Shifter 1 to 3 Fine R	: -50 to +50
Pitch Shifter 1 to 3 Pre Delay R	: 0 to 320ms
Pitch Shifter 1 Feedback R	: 0 to 100
Pitch Shifter 1 to 3 Level R	: 0 to 100
Direct Delay R	: 0 to 20ms
Direct Level R	: 0 to 100
Effect Level R*	: 0 to 100
Bass	: -12dB to +12dB
Treble	: -12dB to +12dB

Equalizer*

Low EQ	: -20dB to +20dB
Low-Mid f	: 100Hz to 10.0kHz
Low-Mid Q	: 0.5 to 16
Low-Mid EQ	: -20dB to +20dB
High-Mid f	: 100Hz to 10.0kHz
High-Mid Q	: 0.5 to 16
High-Mid EQ	: -20dB to +20dB
High EQ	: -20dB to +20dB
Level	: -20dB to +20dB

Master

Level*	: 0 to 100

Assign 1 to 4

Target : For parameters marked with an asterisk, Overall Effect On/Off for the algorithm, Metronome On/Off, Metronome Level, Tuner On/Off

Min : -

Max : -

Source : Control 1 to 3/Exp Pedal/ MIDI After Touch/MIDI Pitch Bend/ MIDI CC#0 to 31, 64 to 119

Assign Mode

Control 1 : Momentary/Latch

Control 1&2/1&3/2/3 : FS-5U Momentary/FS-5U Latch/ FS-5L Latch

MIDI After Touch/MIDI Pitch Bend/ MIDI CC#0 to 31, 64 to 119 : Momentary/Latch

119 Stereo Phaser

```
119 St. Phaser
--- St. Phaser ---
```

Produces a phased effect that offers a more spacious sound by adding to the direct sound other portions which have been shifted in phase. Since it supports stereo, the phaser effect is obtained without losing any of the localization information for the stereo image.

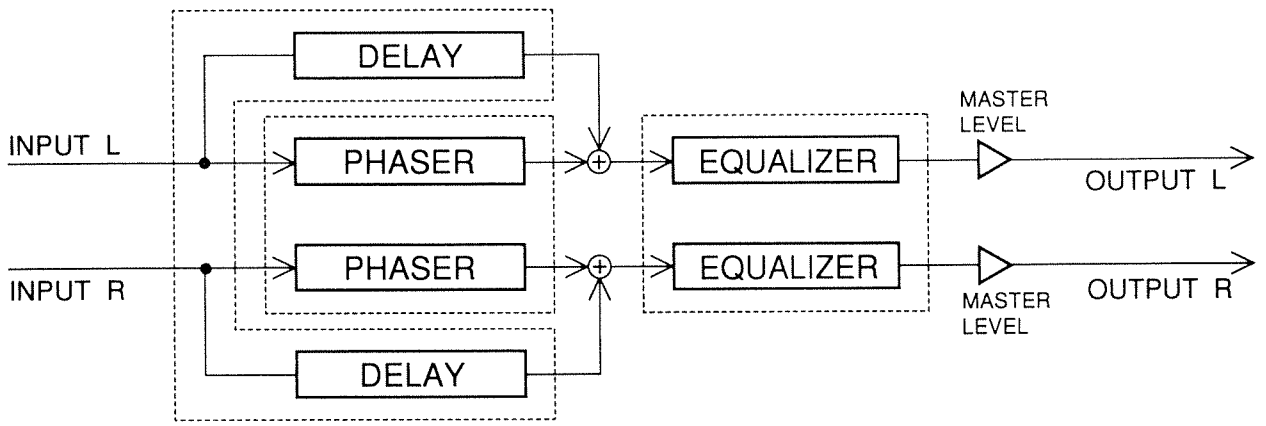

Phaser

Mode	: 4/8/12/16/20/24/ 28/32/36/40stage Bi-Phase 4/8/12/16/20
Rate*	: 0 to 100
Depth	: 0 to 100
Manual	: 0 to 100
Resonance	: 0 to 100
Separation	: 0 to 100
Step	: On/Off
Step Rate*	: 0 to 100
Bass	: -12dB to +12dB
Treble	: -12dB to +12dB
Effect Level	: 0 to 100

Delay*

Delay Time	: 0 to 680ms
Feedback	: 0 to 100
Level	: 0 to 100

Equalizer*

Low EQ	: -20dB to +20dB
Low-Mid f	: 100Hz to 10.0kHz
Low-Mid Q	: 0.5 to 16
Low-Mid EQ	: -20dB to +20dB
High-Mid f	: 100Hz to 10.0kHz
High-Mid Q	: 0.5 to 16
High-Mid EQ	: -20dB to +20dB
High EQ	: -20dB to +20dB

Master

Level*	: 0 to 100

Assign 1 to 4

Target	: For parameters marked with an asterisk, Overall Effect On/Off for the algorithm, Metronome On/Off, Metronome Level, Tuner On/Off
Min	: -
Max	: -
Source	: Control 1 to 3/Exp Pedal/ MIDI After Touch/MIDI Pitch Bend/ MIDI CC#0 to 31, 64 to 119
Assign Mode	
Control 1	: Momentary/Latch
Control 1&2/1&3/2/3	: FS-5U Momentary/FS-5U Latch/ FS-5L Latch
MIDI After Touch/MIDI Pitch Bend/ MIDI CC#0 to 31, 64 to 119	: Momentary/Latch

120 Stereo Flanger

```
120 St. Flanger
-- St. Flanger --
```

A flanging effect that is fully stereo-compatible. In addition to the standard flanging effect, other types of effects (Step, Gate 1, Gate 2, Gate 3) can be obtained by altering the "Mode" setting.

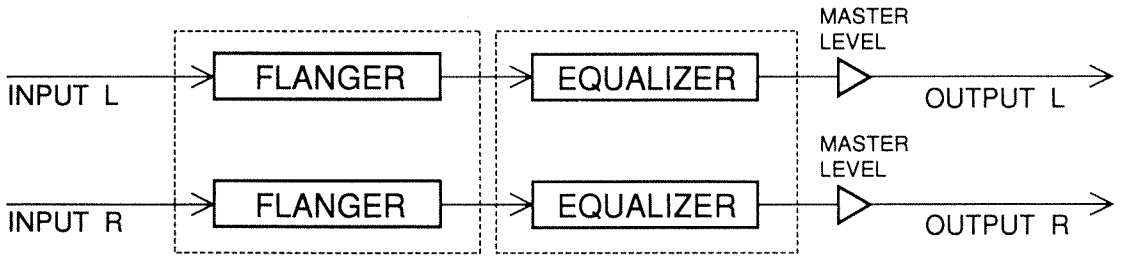

Flanger

Rate*	: 0 to 100
Depth	: 0 to 100
Manual	: 0 to 100
Resonance	: 0 to 100
Separation	: 0 to 100
Step Mode	: Off/Step/Gate1/Gate2/Gate3
Step Rate*	: 0 to 100
Bass	: -12dB to +12dB
Treble	: -12dB to +12dB
Effect Level	: 0 to 100

Equalizer*

Low EQ	: -20dB to +20dB
Low-Mid f	: 100Hz to 10.0kHz
Low-Mid Q	: 0.5 to 16
Low-Mid EQ	: -20dB to +20dB
High-Mid f	: 100Hz to 10.0kHz
High-Mid Q	: 0.5 to 16
High-Mid EQ	: -20dB to +20dB
High EQ	: -20dB to +20dB
Level	: -20dB to +20dB

Master

Level*	: 0 to 100

Assign 1 to 4

Target	: For parameters marked with an asterisk, Overall Effect On/Off for the algorithm, Metronome On/Off, Metronome Level, Tuner On/Off
Min	: -
Max	: -
Source	: Control 1 to 3/Exp Pedal/ MIDI After Touch/MIDI Pitch Bend/ MIDI CC#0 to 31, 64 to 119
Assign Mode	
Control 1	: Momentary/Latch
Control 1&2/1&3/2/3	: FS-5U Momentary/FS-5U Latch/ FS-5L Latch
MIDI After Touch/MIDI Pitch Bend/ MIDI CC#0 to 31, 64 to 119	: Momentary/Latch

121 Vocoder 1

```
121 Vocoder 1
--- Vocoder 1 --
```

A 10-band vocoder. After dividing the sound (from a synthesizer or other instrument) from the L input channel into 10 frequency bands, it is processed so it takes on a correlative relationship with the frequency content of the vocal sounds that have been input to the R channel using a microphone. As a result, vocals seem as if they were produced using the instrument's sound.

We recommend the microphone should be pre-amplified (by a mixer, etc)

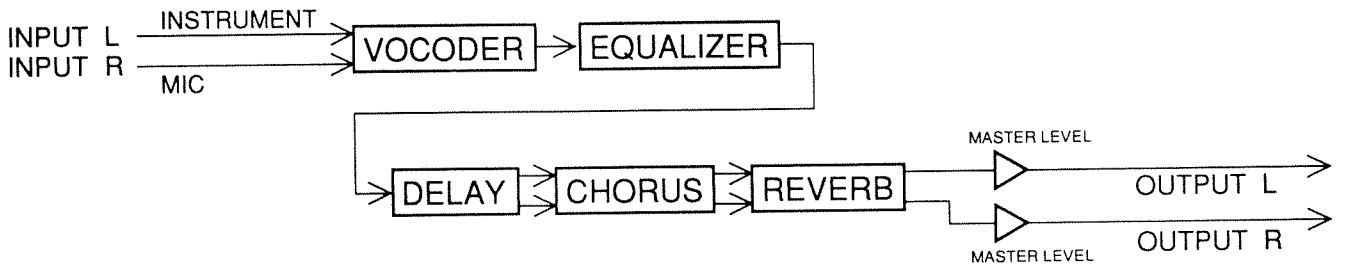

Vocoder*

Distortion	: On/Off
Drive	: 0 to 100
Distortion Level	: 0 to 100
Mic Limiter	: On/Off
Threshold	: 0 to 100
Limiter Level	: 0 to 100
Mic EQ	: On/Off
Low EQ	: -20dB to +20dB
Mid f	: 100Hz to 10.0kHz
Mid Q	: 0.5 to 16
Mid EQ	: -20dB to +20dB
High EQ	: -20dB to +20dB
EQ Level	: -20dB to +20dB
Mode	: Sharp/Soft
Sens	: 0 to 100
Voice Character 1 to 10	: 0 to 100
Gate Threshold	: 0 to 100
Mic HPF	: Thru/ 90Hz to 12kHz
Mic Mix	: 0 to 100
Noise Suppressor Threshold	: 0 to 100
Vocoder Level*	: 0 to 100

Equalizer*

Low EQ	: -20dB to +20dB
Low-Mid f	: 100Hz to 10.0kHz
Low-Mid Q	: 0.5 to 16
Low-Mid EQ	: -20dB to +20dB
High-Mid f	: 100Hz to 10.0kHz
High-Mid Q	: 0.5 to 16
High-Mid EQ	: -20dB to +20dB
High EQ	: -20dB to +20dB
Level	: -20dB to +20dB

Delay*

Delay Time C	: 0 to 1200ms
Feedback	: 0 to 100
Level C*	: 0 to 100
Delay Time L	: 0 to 1200ms
Level L*	: 0 to 100
Delay Time R	: 0 to 1200ms
Level R*	: 0 to 100
LP Filter	: 500Hz to Thru

Chorus*

Mode	: Mono/Stereo
Rate*	: 0 to 100
Depth	: 0 to 100
Pre Delay	: 0 to 50.0ms
LP Filter	: 500Hz to Thru
Level	: 0 to 100

Reverb*

Mode	: Room1/Room2/Hall1/ Hall2/Plate
Reverb Time	: 0.1 to 20.0s
Pre Delay	: 0 to 100ms
HP Filter	: Thru to 800Hz
LP Filter	: 500Hz to Thru
Direct Level	: 0 to 100
Effect Level*	: 0 to 100

Master

Level*	: 0 to 100

Assign 1 to 4

Target	: For parameters marked with an asterisk, Overall Effect On/Off for the algorithm, Metronome On/Off, Metronome Level, Tuner On/Off
Min	: -
Max	: -
Source	: Control 1 to 3/Exp Pedal/ MIDI After Touch/MIDI Pitch Bend/ MIDI CC#0 to 31, 64 to 119
Assign Mode	
Control 1	: Momentary/Latch
Control 1&2/1&3/2/3	: FS-5U Momentary/FS-5U Latch/ FS-5L Latch
MIDI After Touch/MIDI Pitch Bend/ MIDI CC#0 to 31, 64 to 119	: Momentary/Latch

122 Vocoder 2

```
122 Vocoder 2
--- Vocoder 2 --
```

A 21-band vocoder. After dividing the sound (from a synthesizer or other instrument) from the L input channel into 21 frequency bands, the sound is processed so it takes on a correlative relationship with the frequency content of the vocal sounds that have been input to the R channel using a microphone. As a result, vocals seem as if they were produced using the instrument's sound.

We recommend the microphone should be pre-amplified (by a mixer, etc)

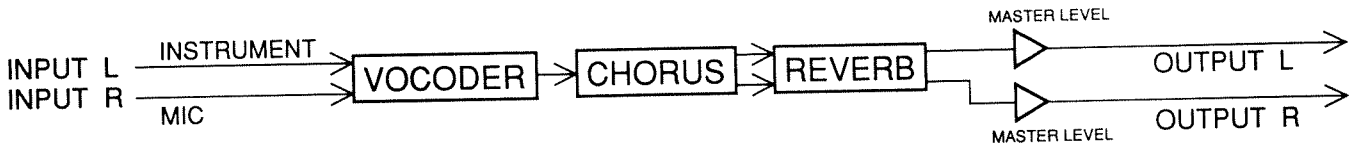

Vocoder*

Mode	: Sharp/Soft
Sens	: 0 to 100
Voice Character 1 to 21	: 0 to 100
Gate Threshold	: 0 to 100
Mic HPF	: Thru/90Hz to 12kHz
Mic Mix	: 0 to 100
Noise Suppressor Threshold	: 0 to 100
Vocoder Level*	: 0 to 100

Chorus*

Mode	: Mono/Stereo
Rate*	: 0 to 100
Depth	: 0 to 100
Pre Delay	: 0.0 to 50.0ms
LP Filter	: 500Hz to Thru
Effect Level	: 0 to 100

Reverb*

Reverb Time	: 0.1 to 20.0s
Pre Delay	: 0 to 100ms
HP Filter	: Thru to 800Hz
LP Filter	: 500Hz to Thru
Direct Level	: 0 to 100
Effect Level*	: 0 to 100

Master

Level*	: 0 to 100

Assign 1 to 4

Target	: For parameters marked with an asterisk, Overall Effect On/Off for the algorithm, Metronome On/Off, Metronome Level, Tuner On/Off
Min	: -
Max	: -
Source	: Control 1 to 3/Exp Pedal/ MIDI After Touch/MIDI Pitch Bend/ MIDI CC#0 to 31, 64 to 119
Assign Mode	
Control 1	: Momentary/Latch
Control 1&2/1&3/2/3	: FS-5U Momentary/FS-5U Latch/ FS-5L Latch
MIDI After Touch/MIDI Pitch Bend/ MIDI CC#0 to 31, 64 to 119	: Momentary/Latch

123 Keyboard Multi

```
123 Kb Multi
--- Kb Multi ---
```

A selection of multiple effects geared perfectly towards keyboards.

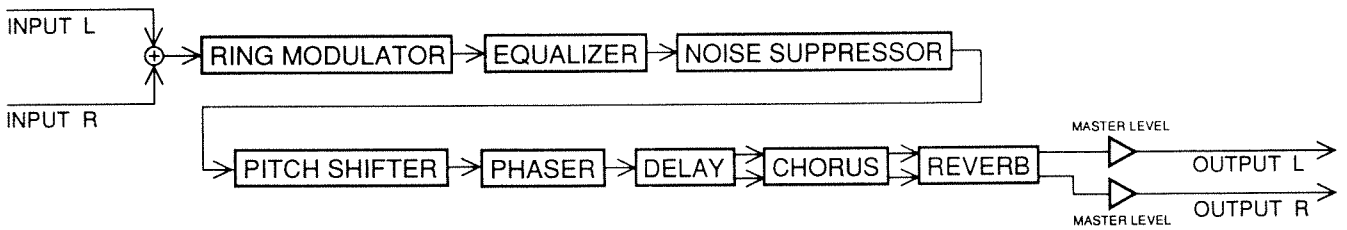

Ring Modulator*

Modulation f*	: 0 to 100
Direct Level	: 0 to 100
Effect Level	: 0 to 100

Equalizer*

Low EQ	: -20dB to +20dB
Low-Mid f	: 100Hz to 10.0kHz
Low-Mid Q	: 0.5 to 16
Low-Mid EQ	: -20dB to +20dB
High-Mid f	: 100Hz to 10.0kHz
High-Mid Q	: 0.5 to 16
High-Mid EQ	: -20dB to +20dB
High EQ	: -20dB to +20dB
HP Filter	: Thru to 800Hz
LP Filter	: 500Hz to Thru
Level	: -20dB to +20dB

Noise Suppressor

Threshold	: 0 to 100
Release	: 0 to 100
Level*	: 0 to 100

Pitch Shifter*

Mode	: 1/2/3/4
Pitch*	: -24 to +24
Fine	: -50 to +50
Pre Delay	: 0 to 100ms
Feedback	: 0 to 100
Direct Level	: 0 to 100
Effect Level	: 0 to 100

Phaser*

Mode	: 4stage/8stage
Rate*	: 0 to 100
Depth	: 0 to 100
Manual	: 0 to 100
Resonance	: 0 to 100
Step	: On/Off
Step Rate	: 0 to 100

Delay*

Delay Time C	: 0 to 400ms
Feedback	: 0 to 100
Level C*	: 0 to 100
Delay Time L	: 0 to 400ms
Level L*	: 0 to 100
Delay Time R	: 0 to 400ms
Level R*	: 0 to 100
LP Filter	: 500Hz to Thru

Chorus*

Mode	: Mono/Stereo1/Stereo2
Rate*	: 0 to 100
Depth	: 0 to 100
Pre Delay	: 0.0 to 50.0ms
LP Filter	: 500Hz to Thru
Effect Level	: 0 to 100

Reverb*

Mode	: Room1/Room2/ Hall1/Hall2/Plate
Reverb Time	: 0.1 to 20.0s
Pre Delay	: 0 to 100ms
HP Filter	: Thru to 800Hz
LP Filter	: 500Hz to Thru
Direct Level	: 0 to 100
Effect Level*	: 0 to 100

Master

Level*	: 0 to 100

Assign 1 to 4

Target	: For parameters marked with an asterisk, Overall Effect On/Off for the algorithm, Metronome On/Off, Metronome Level, Tuner On/Off
Min	: -
Max	: -
Source	: Control 1 to 3/Exp Pedal/ MIDI After Touch/MIDI Pitch Bend/ MIDI CC#0 to 31, 64 to 119
Assign Mode	
Control 1	: Momentary/Latch
Control 1&2/1&3/2/3	: FS-5U Momentary/FS-5U Latch/ FS-5L Latch
MIDI After Touch/MIDI Pitch Bend/ MIDI CC#0 to 31, 64 to 119	: Momentary/Latch

124 Rotary Multi

```
124 Rotary Multi
- Rotary Multi -
```

Multiple effects which focus mainly on the simulation of rotary speakers.

* ***This algorithm is designed to accept input on the L channel only. Be sure to connect your instrument to the L (MONO) jack.***
* ***If using the SE-70's internal tuner with this algorithm, be sure to set the Input Level knobs so the R knob is at the same position as the L knob.***

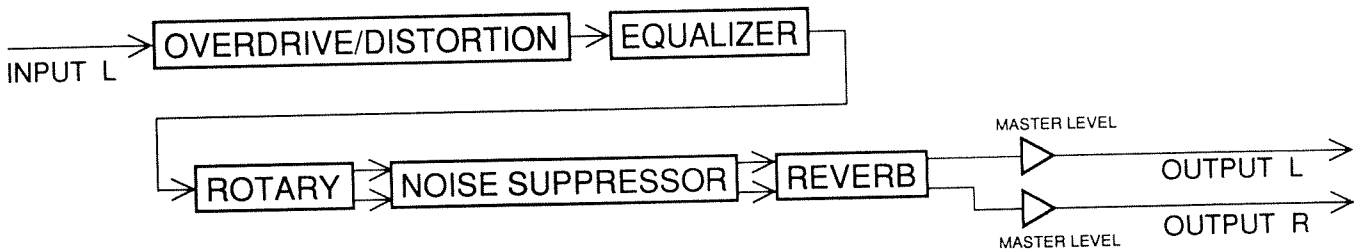

Overdrive/Distortion*

Mode	: Overdrive/Distortion
Drive*	: 0 to 100
Level	: 0 to 100

Equalizer*

Low EQ	: -20dB to +20dB
Low-Mid f	: 100Hz to 10kHz
Low-Mid Q	: 0.5 to 16
Low-Mid EQ	: -20dB to +20dB
High-Mid f	: 100Hz to 10kHz
High-Mid Q	: 0.5 to 16
High-Mid EQ	: -20dB to +20dB
High EQ	: -20dB to +20dB
Level	: -20dB to +20dB

Rotary*

Speed*	: Fast/Slow
Low Rate Fast*	: 0 to 100
Low Rate Slow*	: 0 to 100
Low Rise Time	: 0 to 100
Low Fall Time	: 0 to 100
Low Level	: 0 to 100
High Rate Fast*	: 0 to 100
High Rate Slow*	: 0 to 100
High Rise Time	: 0 to 100
High Fall Time	: 0 to 100
High Level	: 0 to 100
Separation	: 0 to 100

Noise Suppressor

Threshold	: 0 to 100
Release	: 0 to 100
Level*	: 0 to 100

Reverb*

Reverb Time	: 0.1 to 20.0s
Pre Delay	: 0 to 100ms
HP Filter	: Thru to 800Hz
LP Filter	: 500Hz to Thru
Direct Level	: 0 to 100
Effect Level*	: 0 to 100

Master

Level*	: 0 to 100

Assign 1 to 4

Target : For parameters marked with an asterisk, Overall Effect On/Off for the algorithm, Metronome On/Off, Metronome Level, Tuner On/Off

Min : -

Max : -

Source : Control 1 to 3/Exp Pedal/ MIDI After Touch/MIDI Pitch Bend/ MIDI CC#0 to 31, 64 to 119

Assign Mode

Control 1 : Momentary/Latch

Control 1&2/1&3/2/3

: FS-5U Momentary/FS-5U Latch/ FS-5L Latch

MIDI After Touch/MIDI Pitch Bend/ MIDI CC#0 to 31, 64 to 119

: Momentary/Latch

125 Rhodes Multi

```
125 Rhodes Multi
- Rhodes Multi -
```

Produces a Rhodes-like sound. Ideal for use with electric piano.

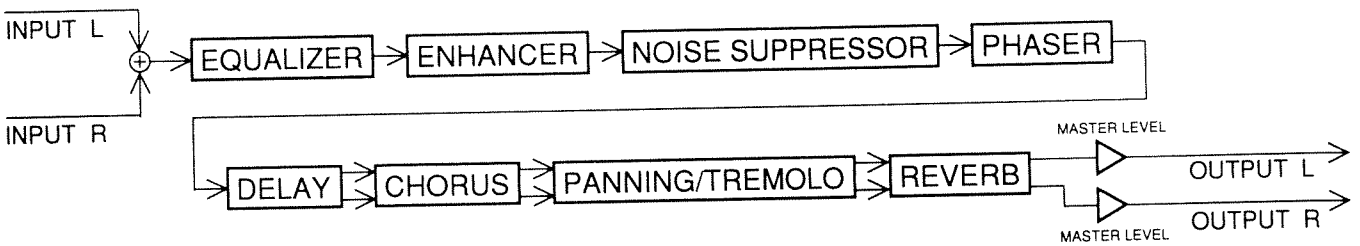

Equalizer*

Low EQ	: -20dB to +20dB
Low-Mid f	: 100Hz to 10kHz
Low-Mid Q	: 0.5 to 16
Low-Mid EQ	: -20dB to +20dB
High-Mid f	: 100Hz to 10kHz
High-Mid Q	: 0.5 to 16
High-Mid EQ	: -20dB to +20dB
High EQ	: -20dB to +20dB
HP Filter	: Thru to 800Hz
LP Filter	: 500Hz to Thru
Level	: -20dB to +20dB

Enhancer*

Sens	: 0 to 100
Frequency	: 1.00kHz to 10.00kHz
Mix Level	: 0 to 100
Low Mix Level	: 0 to 100
Level	: 0 to 100

Noise Suppressor

Threshold	: 0 to 100
Release	: 0 to 100
Level*	: 0 to 100

Phaser*

Mode	: 4stage/8stage
Rate*	: 0 to 100
Depth	: 0 to 100
Manual	: 0 to 100
Resonance	: 0 to 100
Step	: On/Off
Step Rate	: 0 to 100

Delay*

Delay Time C	: 0 to 600ms
Feedback	: 0 to 100
Level C*	: 0 to 100
Delay Time L	: 0 to 600ms
Level L*	: 0 to 100
Delay Time R	: 0 to 600ms
Level R*	: 0 to 100
LP Filter	: 500Hz to Thru

Chorus*

Mode	: Mono/Stereo
Rate*	: 0 to 100
Depth	: 0 to 100
Pre Delay	: 0.0 to 50.0ms
LP Filter	: 500Hz to Thru
Effect Level	: 0 to 100

Panning/Tremolo*

Mode	: Pan/Tremolo
Modulation Wave	: Tri/Square
Rate*	: 0 to 100
Depth	: 0 to 100
Balance*	: L100 R0 to L0 R100

Reverb*

Mode	: Room1/Room2/ Hall1/Hall2/Plate
Reverb Time	: 0.1 to 20.0s
Pre Delay	: 0 to 100ms
HP Filter	: Thru to 800Hz
LP Filter	: 500Hz to Thru
Direct Level	: 0 to 100
Effect Level*	: 0 to 100

Master

Level*	: 0 to 100

Assign 1 to 4

Target : For parameters marked with an asterisk, Overall Effect On/Off for the algorithm, Metronome On/Off, Metronome Level, Tuner On/Off

Min : -

Max : -

Source : Control 1 to 3/Exp Pedal/ MIDI After Touch/MIDI Pitch Bend/ MIDI CC#0 to 31, 64 to 119

Assign Mode

Control 1 : Momentary/Latch

Control 1&2/1&3/2/3 : FS-5U Momentary/FS-5U Latch/ FS-5L Latch

MIDI After Touch/MIDI Pitch Bend/ MIDI CC#0 to 31, 64 to 119 : Momentary/Latch

126 Guitar Multi 1

```
126 Gt. Multi 1
--- Gt. Multi 1 ---
```

A selection of multiple effects geared towards guitars. Makes it easy to create sounds suitable for most any type of music, since it allows for up to 16 effects to be used simultaneously. Also ideal for acoustic guitars with pickups.

* ***This algorithm is designed to accept input on the L channel only. Be sure to connect your instrument to the L (MONO) jack.***
* ***If using the SE-70's internal tuner with this algorithm, be sure to set the Input Level knobs so the R knob is at the same position as the L knob.***

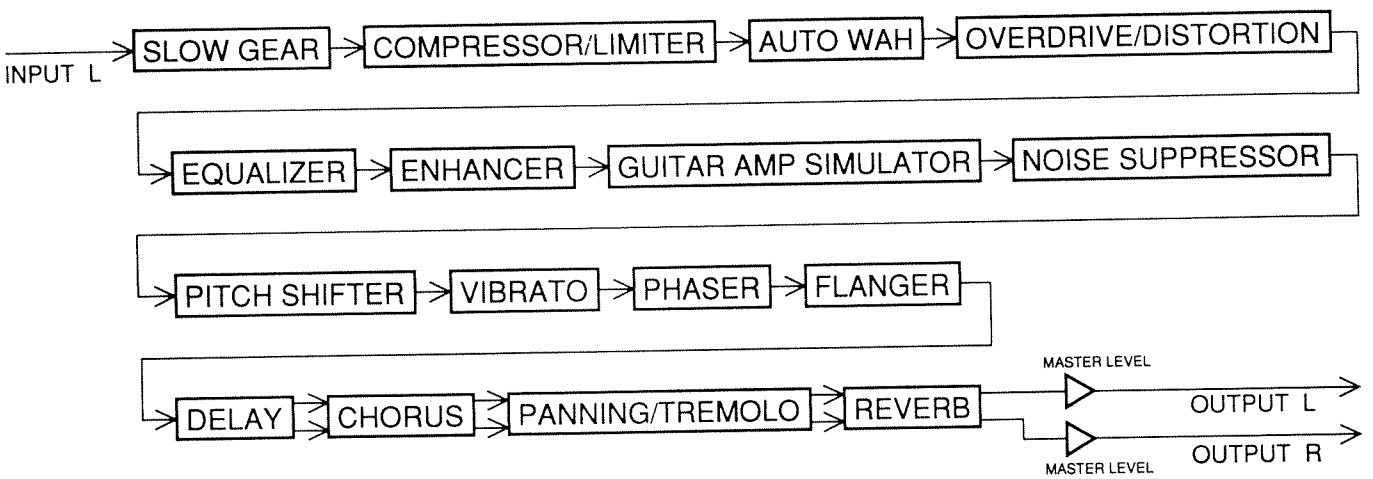

Slow Gear*

Mode	: Auto/Manual
Sens	: 0 to 100
Attack	: 0 to 100
Trigger*	: On/Off

Compressor/Limiter*

Mode	: Comp/Limiter
<Compressor>	
Sustain	: 0 to 100
Attack	: 0 to 100
<Limiter>	
Threshold	: 0 to 100
Release	: 0 to 100
Ratio	: 1.5: 1/2: 1/4: 1/100: 1
Tone	: -50 to +50
Level*	: 0 to 100

Auto Wah*

Mode	: BPF/LPF
Polarity	: Up/Down
Sens	: 0 to 100
Manual*	: 0 to 100
Peak	: 0 to 100
Rate	: 0 to 100
Depth	: 0 to 100

Overdrive/Distortion*

Mode	: Natural OD/Vintage OD/ Turbo OD/Crunch/ Distortion/Metal 1/ Metal 2/Fuzz
Gain	: High/Low
Drive*	: 0 to 100
Tone	: -50 to +50
Level	: 0 to 100

Equalizer*

Low EQ	: -20dB to +20dB
Low-Mid f	: 100Hz to 10.0kHz
Low-Mid Q	: 0.5 to 16
Low-Mid EQ	: -20dB to +20dB
High-Mid f	: 100Hz to 10.0kHz
High-Mid Q	: 0.5 to 16
High-Mid EQ	: -20dB to +20dB
High EQ	: -20dB to +20dB
Level	: -20dB to +20dB

Enhancer*

Sens	: 0 to 100
Frequency	: 1.00kHz to 10.00kHz
Mix Level	: 0 to 100
Level	: 0 to 100

Guitar Amp Simulator*

Mode	: Small/Built In/2Stack/3stack

Noise Suppressor

Threshold	: 0 to 100
Release	: 0 to 100
Level*	: 0 to 100

Pitch Shifter*

Mode	: 1/2/3/4
Pitch*	: -24 to +24
Fine	: -50 to +50
Pre Delay	: 0 to 300ms
Feedback	: 0 to 100
Direct Level	: 0 to 100
Effect Level	: 0 to 100

Vibrato*

Trigger*	: On/Off
Rate*	: 0 to 100
Depth	: 0 to 100
Rise Time	: 0 to 100

Phaser*

Mode	: 4Stage/8Stage
Rate*	: 0 to 100
Depth	: 0 to 100
Manual	: 0 to 100
Resonance	: 0 to 100
Step	: On/Off
Step Rate	: 0 to 100

Flanger*

Rate*	: 0 to 100
Depth	: 0 to 100
Manual	: 0 to 100
Resonance	: 0 to 100

Delay*

Delay Time C	: 0 to 800ms
Feedback	: 0 to 100
Level C*	: 0 to 100
Delay Time L	: 0 to 800ms
Level L*	: 0 to 100
Delay Time R	: 0 to 800ms
Level R*	: 0 to 100
LP Filter	: 500Hz to Thru

Chorus*

Mode	: Mono/Stereo
Rate*	: 0 to 100
Depth	: 0 to 100
Pre Delay	: 0.0 to 50.0ms
LP Filter	: 500Hz to Thru
Effect Level	: 0 to 100

Panning/Tremolo*

Mode	: Pan/Tremolo
Modulation Wave	: Tri/Square
Rate*	: 0 to 100
Depth	: 0 to 100
Balance*	: L100 R0 to L0 R100

Reverb*

Mode	: Room1/Room2/ Hall1/Hall2/Plate
Reverb Time	: 0.1 to 20.0s
Pre Delay	: 0 to 100ms
HP Filter	: Thru to 800Hz
LP Filter	: 500Hz to Thru
Direct Level	: 0 to 100
Effect Level*	: 0 to 100

Master

Level*	: 0 to 100

Assign 1 to 4

Target : For parameters marked with an asterisk, Overall Effect On/Off for the algorithm, Metronome On/Off, Metronome Level, Tuner On/Off

Min : -

Max : -

Source : Control 1 to 3/Exp Pedal/ MIDI After Touch/MIDI Pitch Bend/ MIDI CC#0 to 31, 64 to 119

Assign Mode

Control 1 : Momentary/Latch

Control 1&2/1&3/2/3 : FS-5U Momentary/FS-5U Latch/ FS-5L Latch

MIDI After Touch/MIDI Pitch Bend/ MIDI CC#0 to 31, 64 to 119 : Momentary/Latch

127 Guitar Multi 2

```
127 Gt. Multi 2
--- Gt. Multi 2 ---
```

Another selection of multiple effects for use with guitars. Includes a four-voice pitch shifter and a feedbacker. In addition, it allows some really distorted sounds to be created since it provides pitch shifting and EQ before the distortion effect.

* ***This algorithm is designed to accept input on the L channel only. Be sure to connect your instrument to the L (MONO) jack.***
* ***If using the SE-70's internal tuner with this algorithm, be sure to set the Input Level knobs so the R knob is at the same position as the L knob.***

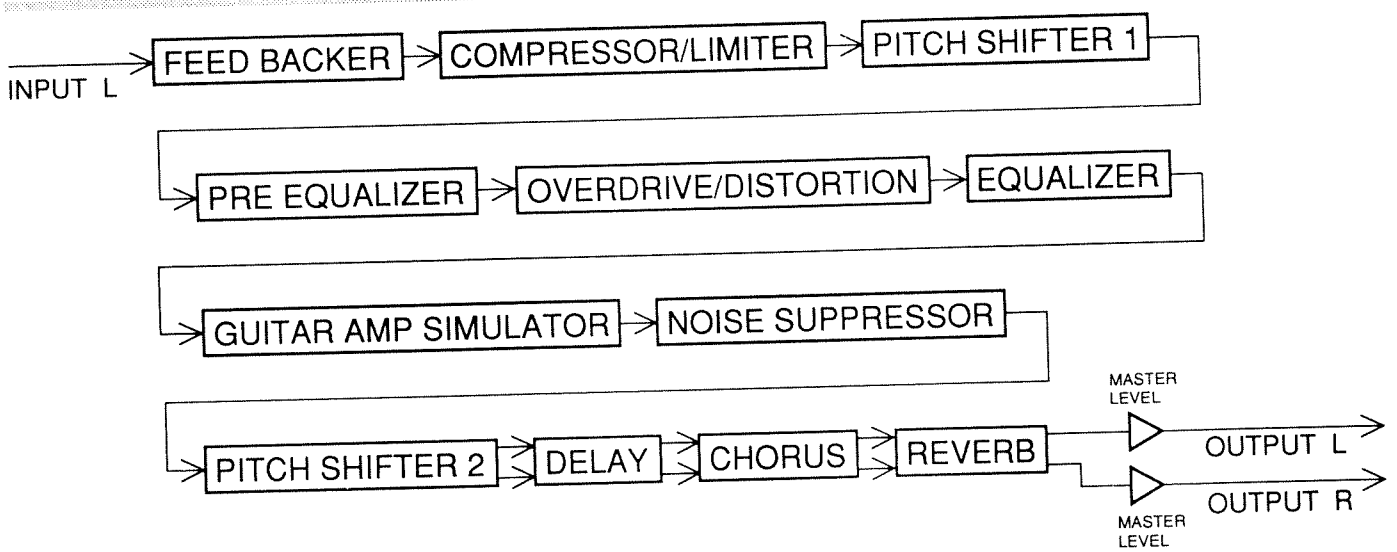

Feedbacker

Rise Time	: 0 to 100
Vibrato Rate	: 0 to 100
Vibrato Depth	: 0 to 100
Level	: 0 to 100
+1oct Level	: 0 to 100
Trigger*	: On/Off

Compressor/Limiter*

Mode	: Comp/Limiter
<Compressor>	
Sustain	: 0 to 100
Attack	: 0 to 100
<Limiter>	
Threshold	: 0 to 100
Release	: 0 to 100
Ratio	: 1.5: 1/2: 1/4: 1/100: 1
Tone	: -50 to +50
Level*	: 0 to 100

Pitch Shifter 1*

Mode	: 1 to 3
Pitch*	: -24 to +24
Fine	: -50 to +50
Direct Level	: 0 to 100
Effect Level	: 0 to 100

Pre Equalizer*

Low EQ	: -20dB to +20dB
Mid f	: 100Hz to 10kHz
Mid Q	: 0.5 to 16
Mid EQ	: -20dB to +20dB
High EQ	: -20dB to +20dB
Level	: -20dB to +20dB

Overdrive/Distortion*

Mode	: Natural OD/Vintage OD/Turbo OD/ Crunch/Distortion/Metal 1/ Metal 2/Fuzz
Gain	: High/Low
Drive*	: 0 to 100
Tone	: -50 to +50
Level	: 0 to 100

Equalizer*

Low EQ	: -20dB to +20dB
Low-Mid f	: 100Hz to 10.0kHz
Low-Mid Q	: 0.5 to 16
Low-Mid EQ	: -20dB to +20dB
High-Mid f	: 100Hz to 10.0kHz
High-Mid Q	: 0.5 to 16
High-Mid EQ	: -20dB to +20dB
High EQ	: -20dB to +20dB
Level	: -20dB to +20dB

Guitar Amp Simulator*

Mode	: Small/Built In/2Stack/3Stack

Noise Suppressor

Threshold	: 0 to 100
Release	: 0 to 100
Level*	: 0 to 100

Pitch Shifter 2*

Pitch Shifter 1 to 4 Mode	: 1/2/3/4/5/ Inv1/Inv2
Pitch Shifter 1 to 4 Pitch*	: -24 to +24
Pitch Shifter 1 to 4 Fine	: -50 to +50
Pitch Shifter 1 to 4 Pre Delay	: 0 to 400ms
Pitch Shifter 1 Feedback	: 0 to 100
Pitch Shifter 1 to 4 Pan	: L100 R0 to L0 R100
Pitch Shifter 1 to 4 Level	: 0 to 100
Direct Delay	: 0 to 20ms
Direct Pan	: L100 R0 to L0 R100
Direct Level	: 0 to 100

Delay*

Delay Time C	: 0 to 400ms
Feedback	: 0 to 100
Level C*	: 0 to 100
Delay Time L	: 0 to 400ms
Level L*	: 0 to 100
Delay Time R	: 0 to 400ms
Level R*	: 0 to 100
LP Filter	: 500Hz to Thru

Chorus*

Mode	: Mono/Stereo
Rate*	: 0 to 100
Depth	: 0 to 100
Pre Delay	: 0.0 to 10.0ms
LP Filter	: 500Hz to Thru
Effect Level	: 0 to 100

Reverb*

Mode	: Room1/Room2/ Hall1/Hall2/Plate
Reverb Time	: 0.1 to 20.0s
Pre Delay	: 0 to 25ms
HP Filter	: Thru to 800Hz
LP Filter	: 500Hz to Thru
Direct Level	: 0 to 100
Effect Level*	: 0 to 100

Master

Level*	: 0 to 100

Assign 1 to 4

Target : For parameters marked with an asterisk, Overall Effect On/Off for the algorithm, Metronome On/Off, Metronome Level, Tuner On/Off

Min : -

Max : -

Source : Control 1 to 3/Exp Pedal/ MIDI After Touch/MIDI Pitch Bend/ MIDI CC#0 to 31, 64 to 119

Assign Mode

Control 1 : Momentary/Latch

Control 1&2/1&3/2/3 : FS-5U Momentary/FS-5U Latch/ FS-5L Latch

MIDI After Touch/MIDI Pitch Bend/ MIDI CC#0 to 31, 64 to 119 : Momentary/Latch

128 Guitar Multi 3

```
128 Gt. Multi 3
--- Gt. Multi 3 ---
```

Another selection of multiple effects for use with guitars. Includes a four-tap delay capable of a maximum of 1800 ms.

This algorithm is designed to accept input on the L channel only. Be sure to connect your instrument to the L (MONO) jack.

Note that noise could be produced when using the SE-70's internal tuner with this algorithm if the R Input Level knob is set too high.

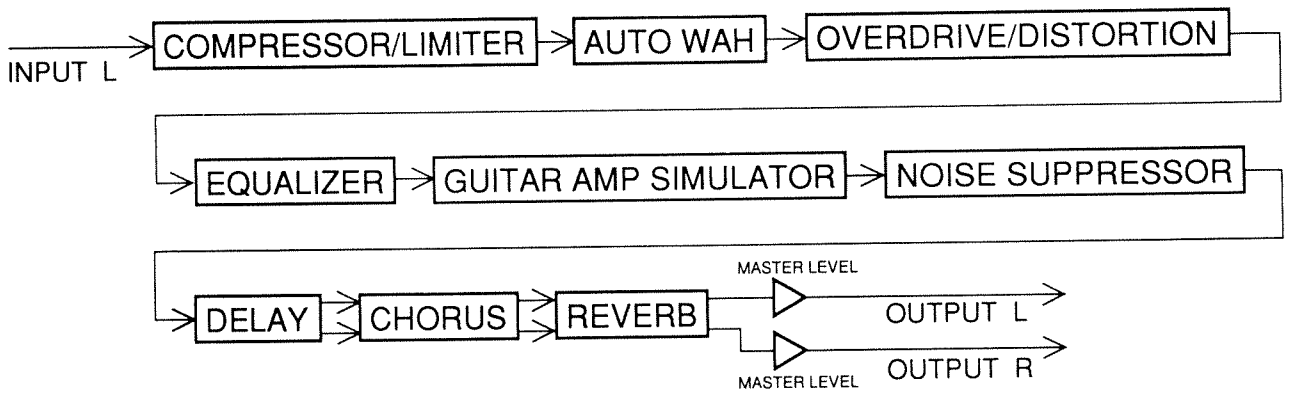

Compressor/Limiter*

Mode	: Comp/Limiter
<Compressor>	
Sustain	: 0 to 100
Attack	: 0 to 100
<Limiter>	
Threshold	: 0 to 100
Release	: 0 to 100
Ratio	: 1.5: 1/2: 1/4: 1/100: 1
Tone	: -50 to +50
Level*	: 0 to 100

Auto Wah*

Mode	: BPF/LPF
Polarity	: Up/Down
Sens	: 0 to 100
Manual*	: 0 to 100
Peak	: 0 to 100
Rate	: 0 to 100
Depth	: 0 to 100
Level	: 0 to 100

Overdrive/Distortion*

Mode	: Natural OD/Vintage OD/ Turbo OD/Crunch/ Distortion/Metal 1/ Metal 2/Fuzz
Gain	: High/Low
Drive*	: 0 to 100
Tone	: -50 to +50
Level	: 0 to 100

Equalizer*

Low EQ	: -20dB to +20dB
Low-Mid f	: 100Hz to 10.0kHz
Low-Mid Q	: 0.5 to 16
Low-Mid EQ	: -20dB to +20dB
High-Mid f	: 100Hz to 10.0kHz
High-Mid Q	: 0.5 to 16
High-Mid EQ	: -20dB to +20dB
High EQ	: -20dB to +20dB
Level	: -20dB to +20dB

Guitar Amp Simulator*

Mode	: Small/Built In/2Stack/3Stack

Noise Suppressor

Threshold	: 0 to 100
Release	: 0 to 100
Level*	: 0 to 100

Delay*

Delay Time 1 to 4	: 0 to 1800ms
Feedback	: 0 to 100
Pan 1 to 4	: L100 R0 to L0 R100
Tap Level 1 to 4*	: 0 to 100
LP Filter	: 500Hz to Thru
Ducking	: On/Off
Ducking Sens	: 0 to 100
Ducking Depth	: 0 to 100
Rise Time	: 0 to 100
Direct Pan	: L100 R0 to L0 R100
Direct Level	: 0 to 100

Chorus*

Mode	: Mono/Stereo
Rate*	: 0 to 100
Depth	: 0 to 100
Pre Delay	: 0.0 to 10.0ms
LP Filter	: 500Hz to Thru
Effect Level	: 0 to 100

Reverb*

Reverb Time	: 0.1 to 20s
Pre Delay	: 0 to 25ms
HP Filter	: Thru to 800Hz
LP Filter	: 500Hz to Thru
Direct Level	: 0 to 100
Effect Level*	: 0 to 100

Master

Level*	: 0 to 100

Assign 1 to 4

Target	: For parameters marked with an asterisk, Overall Effect On/Off for the algorithm, Metronome On/Off, Metronome Level, Tuner On/Off
Min	: -
Max	: -
Source	: Control 1 to 3/Exp Pedal/ MIDI After Touch/MIDI Pitch Bend/ MIDI CC#0 to 31, 64 to 119
Assign Mode	
Control 1	: Momentary/Latch
Control 1&2/1&3/2/3	: FS-5U Momentary/FS-5U Latch/ FS-5L Latch
MIDI After Touch/MIDI Pitch Bend/ MIDI CC#0 to 31, 64 to 119	: Momentary/Latch

129 Guitar Multi 4

```
129 Gt. Multi 4
-- Gt. Multi 4 --
```

More multiple effects designed for use with guitars. Ch 1 (clean) and Ch 2 (drive) are processed independently. A completely new creation can be produced by altering the mix.

* ***This algorithm is designed to accept input on the L channel only. Be sure to connect your instrument to the L (MONO) jack.***
* ***If using the SE-70's internal tuner with this algorithm, be sure to set the Input Level knobs so the R knob is at the same position as the L knob.***

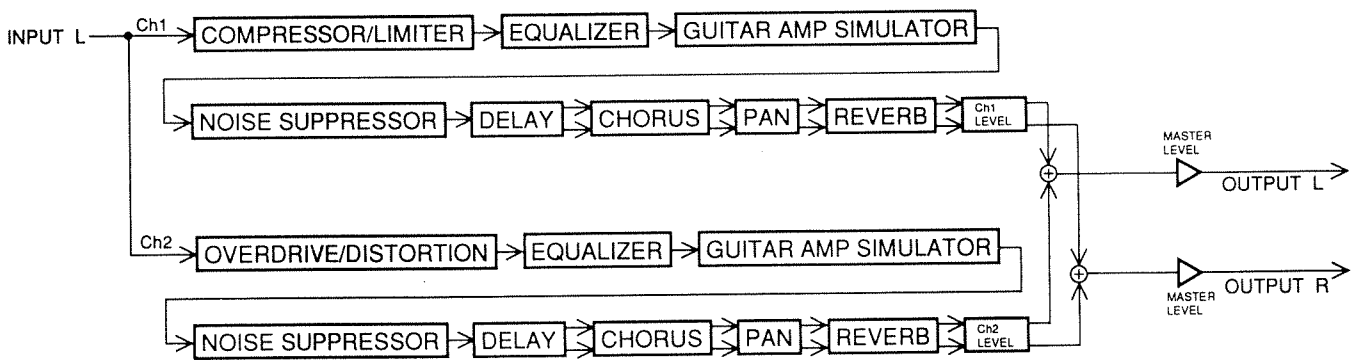

Ch1 Compresser/Limiter*

Mode	: Comp/Limiter
<Compressor>	
Sustain	: 0 to 100
Attack	: 0 to 100
<Limiter>	
Threshold	: 0 to 100
Release	: 0 to 100
Ratio	: 1.5: 1/2: 1/4: 1/100: 1
Tone	: -50 to +50
Level*	: 0 to 100

Ch1 Equalizer*

Low EQ	: -20dB to +20dB
Low-Mid f	: 100Hz to 10.0kHz
Low-Mid Q	: 0.5 to 16
Low-Mid EQ	: -20dB to +20dB
High-Mid f	: 100Hz to 10.0kHz
High-Mid Q	: 0.5 to 16
High-Mid EQ	: -20dB to +20dB
High EQ	: -20dB to +20dB
Level	: -20dB to +20dB

Ch1 Guitar Amp Simulator*

Mode	: Small/Built In/2Stack/3Stack

Ch1 Noise Suppressor

Threshold	: 0 to 100
Release	: 0 to 100
Level*	: 0 to 100

Ch1 Delay*

Delay Time C	: 0 to 600ms
Feedback	: 0 to 100
Level C*	: 0 to 100
Delay Time L	: 0 to 600ms
Level L*	: 0 to 100
Delay Time R	: 0 to 600ms
Level R*	: 0 to 100
LP Filter	: 500Hz to Thru

Ch1 Chorus*

Mode	: Mono/Stereo
Rate*	: 0 to 100
Depth	: 0 to 100
Pre Delay	: 0.0 to 50.0ms
LP Filter	: 500Hz to Thru
Effect Level	: 0 to 100

Ch1 Reverb*

Reverb Time	: 0.1 to 20.0s
Pre Delay	: 0 to 50ms
HP Filter	: Thru to 800Hz
LP Filter	: 500Hz to Thru
Direct Level	: 0 to 100
Effect Level*	: 0 to 100

Ch2 Overdrive/Distortion*

Mode	: Natural OD/Vintage OD/Turbo OD/ Crunch/Distortion/Metal 1/ Metal 2/Fuzz
Gain	: High/Low
Drive*	: 0 to 100
Tone	: -50 to +50
Level	: 0 to 100

Ch2 Equalizer*

Low EQ	: -20dB to +20dB
Low-Mid f	: 100Hz to 10.0kHz
Low-Mid Q	: 0.5 to 16
Low-Mid EQ	: -20dB to +20dB
High-Mid f	: 100Hz to 10.0kHz
High-Mid Q	: 0.5 to 16
High-Mid EQ	: -20dB to +20dB
High EQ	: -20dB to +20dB
Level	: -20dB to +20dB

Ch2 Guitar Amp Simulator*

Mode	: Small/Built In/2Stack/3Stack

Ch2 Noise Suppressor

Threshold	: 0 to 100
Release	: 0 to 100
Level*	: 0 to 100

Ch2 Delay*

Delay Time C	: 0 to 600ms
Feedback	: 0 to 100
Level C*	: 0 to 100
Delay Time L	: 0 to 600ms
Level L*	: 0 to 100
Delay Time R	: 0 to 600ms
Level R*	: 0 to 100
LP Filter	: 500Hz to Thru

Ch2 Chorus*

Mode	: Mono/Stereo
Rate*	: 0 to 100
Depth	: 0 to 100
Pre Delay	: 0.0 to 50.0ms
LP Filter	: 500Hz to Thru
Effect Level	: 0 to 100

Ch2 Reverb*

Reverb Time	: 0.1 to 20.0s
Pre Delay	: 0 to 50ms
HP Filter	: Thru to 800Hz
LP Filter	: 500Hz to Thru
Direct Level	: 0 to 100
Effect Level*	: 0 to 100

Mixer

Ch1 Pan*	: L100 R0 to L0 R100
Ch1 Level*	: 0 to 100
Ch2 Pan*	: L100 R0 to L0 R100
Ch2 Level*	: 0 to 100

Master

Level*	: 0 to 100

Assign 1 to 4

Target	: For parameters marked with an asterisk, Overall Effect On/Off for the algorithm, Metronome On/Off, Metronome Level, Tuner On/Off
Min	: -
Max	: -
Source	: Control 1 to 3/Exp Pedal/ MIDI After Touch/MIDI Pitch Bend/ MIDI CC#0 to 31, 64 to 119
Assign Mode	
Control 1	: Momentary/Latch
Control 1&2/1&3/2/3	: FS-5U Momentary/FS-5U Latch/ FS-5L Latch
MIDI After Touch/MIDI Pitch Bend/ MIDI CC#0 to 31, 64 to 119	: Momentary/Latch

130 Bass Multi

```
130 Bass Multi
--- Bass Multi ---
```

A selection of multiple effects configured to work well with electric basses.

* ***This algorithm is designed to accept input on the L channel only. Be sure to connect your instrument to the L (MONO) jack.***
* ***If using the SE-70's internal tuner with this algorithm, be sure to set the Input Level knobs so the R knob is at the same position as the L knob.***

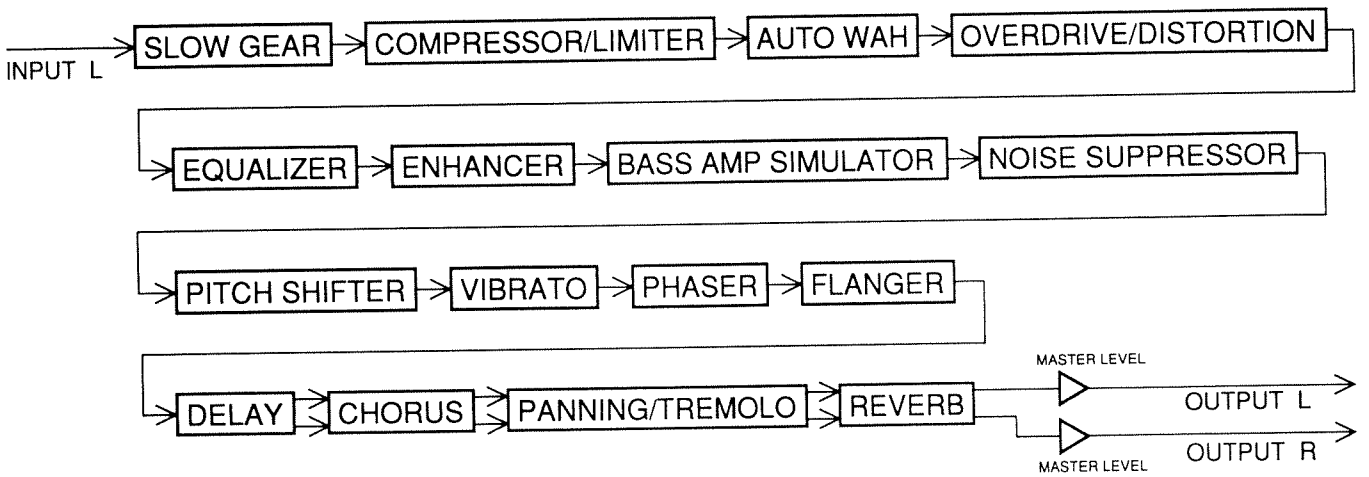

Slow Gear*

Mode	: Auto/Manual
Sens	: 0 to 100
Attack	: 0 to 100
Trigger*	: On/Off

Compressor/Limiter*

Mode	: Comp/Limiter
<Compressor>	
Sustain	: 0 to 100
Attack	: 0 to 100
<Limiter>	
Threshold	: 0 to 100
Release	: 0 to 100
Ratio	: 1.5: 1/2: 1/4: 1/100: 1
Tone	: -50 to +50
Level*	: 0 to 100

Auto Wah*

Mode	: BPF/LPF
Polarity	: Up/Down
Sens	: 0 to 100
Manual*	: 0 to 100
Peak	: 0 to 100
Rate	: 0 to 100
Depth	: 0 to 100
Level	: 0 to 100

Overdrive/Distortion*

Mode	: Overdrive/Distortion/Metal
Gain	: High/Low
Drive*	: 0 to 100
Tone	: -50 to +50
Direct Level	: 0 to 100
Effect Level	: 0 to 100

Equalizer*

Low EQ	: -20dB to +20dB
Low-Mid f	: 100Hz to 10.0kHz
Low-Mid Q	: 0.5 to 16
Low-Mid EQ	: -20dB to +20dB
High-Mid f	: 100Hz to 10.0kHz
High-Mid Q	: 0.5 to 16
High-Mid EQ	: -20dB to +20dB
High EQ	: -20dB to +20dB
Level	: -20dB to +20dB

Enhancer*

Sens	: 0 to 100
Frequency	: 1kHz to 10.0kHz
Mix Level	: 0 to 100
Low Mix Level	: 0 to 100
Level	: 0 to 100

Bass Amp Simulator*

Mode	: Small/Built In/Stack

Noise Suppressor

Threshold	: 0 to 100
Release	: 0 to 100
Level*	: 0 to 100

Pitch Shifter*

Mode	: 1/2/3/4
Pitch*	: -24 to +24
Fine	: -50 to +50
Pre Delay	: 0 to 300ms
Feedback	: 0 to 100
Direct Level	: 0 to 100
Effect Level	: 0 to 100

Vibrato*

Trigger*	: On/Off
Rate*	: 0 to 100
Depth	: 0 to 100
Rise Time	: 0 to 100

Phaser*

Mode	: 4stage/8stage
Rate*	: 0 to 100
Depth	: 0 to 100
Manual	: 0 to 100
Resonance	: 0 to 100
Step	: On/Off
Step Rate	: 0 to 100

Flanger*

Rate*	: 0 to 100
Depth	: 0 to 100
Manual	: 0 to 100
Resonance	: 0 to 100

Delay*

Delay Time C	: 0 to 800ms
Feedback	: 0 to 100
Level C*	: 0 to 100
Delay Time L	: 0 to 800ms
Level L*	: 0 to 100
Delay Time R	: 0 to 800ms
Level R*	: 0 to 100
LP Filter	: 500Hz to Thru

Chorus*

Mode	: Mono/Stereo
Rate*	: 0 to 100
Depth	: 0 to 100
Pre Delay	: 0.0 to 50.0ms
LP Filter	: 500Hz to Thru
Effect Level	: 0 to 100

Panning/Tremolo*

Mode	: Pan/Tremolo
Modulation Wave	: Tri/Square
Rate*	: 0 to 100
Depth	: 0 to 100
Balance*	: L100 R0 to L0 R100

Reverb*

Mode	: Room1/Room2/ Hall1/Hall2/Plate
Reverb Time	: 0.1 to 20.0s
Pre Delay	: 0 to 100ms
HP Filter	: Thru to 800Hz
LP Filter	: 500Hz to Thru
Direct Level	: 0 to 100
Effect Level*	: 0 to 100

Master

Level*	: 0 to 100

Assign 1 to 4

Target	: For parameters marked with an asterisk, Overall Effect On/Off for the algorithm, Metronome On/Off, Metronome Level, Tuner On/Off
Min	: -
Max	: -
Source	: Control 1 to 3/Exp Pedal/ MIDI After Touch/MIDI Pitch Bend/ MIDI CC#0 to 31, 64 to 119
Assign Mode	
Control 1	: Momentary/Latch
Control 1&2/1&3/2/3	: FS-5U Momentary/FS-5U Latch/ FS-5L Latch
MIDI After Touch/MIDI Pitch Bend/ MIDI CC#0 to 31, 64 to 119	: Momentary/Latch

131 Vocal Multi

```
131 Vo Multi
---- Vo Multi ----
```

An algorithm providing effects that are suitable for vocals.

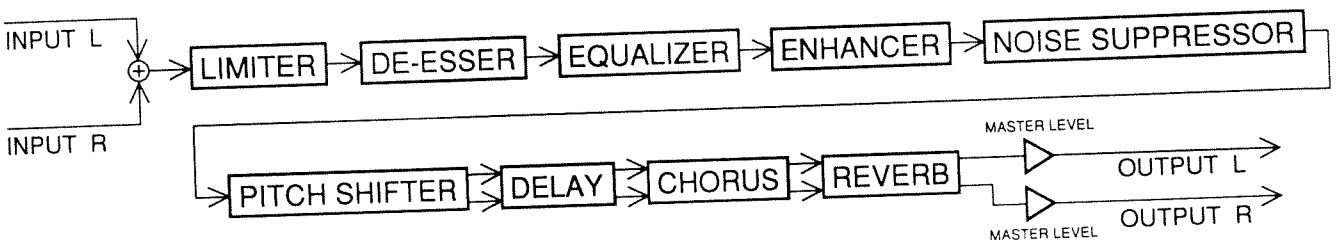

Limiter*

Threshold	: 0 to 100
Release	: 0 to 100
Ratio	: 1.5: 1/2: 1/4: 1/100: 1
Level	: 0 to 100

De-esser*

Sens	: 0 to 100
Frequency	: 1.00k to 10.00kHz

Equalizer*

Low EQ	: -20dB to +20dB
Low-Mid f	: 100Hz to 10.0kHz
Low-Mid Q	: 0.5 to 16
Low-Mid EQ	: -20dB to +20dB
High-Mid f	: 100Hz to 10.0kHz
High-Mid Q	: 0.5 to 16
High-Mid EQ	: -20dB to +20dB
High EQ	: -20dB to +20dB
HP Filter	: Thru to 800Hz
LP Filter	: 500Hz to Thru
Level	: -20dB to +20dB

Enhancer*

Sens	: 0 to 100
Frequency	: 1.00kHz to 10.00kHz
Mix Level	: 0 to 100
Low Mix Level	: 0 to 100
Level	: 0 to 100

Noise Suppressor

Threshold	: 0 to 100
Release	: 0 to 100
Level*	: 0 to 100

Pitch Shifter*

Pitch Shifter 1 to 4 Mode	: 1/2/3/4/5
Pitch Shifter 1 to 4 Pitch*	: -24 to +24
Pitch Shifter 1 to 4 Fine	: -50 to +50
Pitch Shifter 1 to 4 Pre Delay	: 0 to 100ms
Pitch Shifter 1 Feedback	: 0 to 100
Pitch Shifter 1 to 4 Pan	: L100 R0 to L0 R100
Pitch Shifter 1 to 4 Level	: 0 to 100
Direct Delay	: 0 to 40ms
Direct Pan	: L100 R0 to L0 R100
Direct Level	: 0 to 100

Delay*

Delay Time C	: 0 to 800ms
Feedback	: 0 to 100
Level C*	: 0 to 100
Delay Time L	: 0 to 800ms
Level L*	: 0 to 100
Delay Time R	: 0 to 800ms
Level R*	: 0 to 100
LP Filter	: 500Hz to Thru

Chorus*

Mode	: Mono/Stereo
Rate*	: 0 to 100
Depth	: 0 to 100
Pre Delay	: 0.0 to 50.0ms
LP Filter	: 500Hz to Thru
Effect Level	: 0 to 100

Reverb*

Mode	: Room1/Room2/ Hall1/Hall2/Plate
Reverb Time	: 0.1 to 20.0s
Pre Delay	: 0 to 200ms
HP Filter	: Thru to 800Hz
LP Filter	: 500Hz to Thru
Direct Level	: 0 to 100
Effect Level*	: 0 to 100

Master

Level*	: 0 to 100

Assign 1 to 4

Target	: For parameters marked with an asterisk, Overall Effect On/Off for the algorithm, Metronome On/Off, Metronome Level, Tuner On/Off
Min	: -
Max	: -
Source	: Control 1 to 3/Exp Pedal/ MIDI After Touch/MIDI Pitch Bend/ MIDI CC#0 to 31, 64 to 119
Assign Mode	
Control 1	: Momentary/Latch
Control 1&2/1&3/2/3	: FS-5U Momentary/FS-5U Latch/ FS-5L Latch
MIDI After Touch/MIDI Pitch Bend/ MIDI CC#0 to 31, 64 to 119	: Momentary/Latch

132 Guitar Synth

```
132 Guitar Synth
- Guitar Synth -
```

A guitar synthesizer algorithm. The synthesized sound and the guitar sound can be mixed for output.

* ***This algorithm is designed to accept input on the L channel only. Be sure to connect your instrument to the L (MONO) jack.***
* ***If using the SE-70's internal tuner with this algorithm, be sure to set the Input Level knobs so the R knob is at the same position as the L knob.***

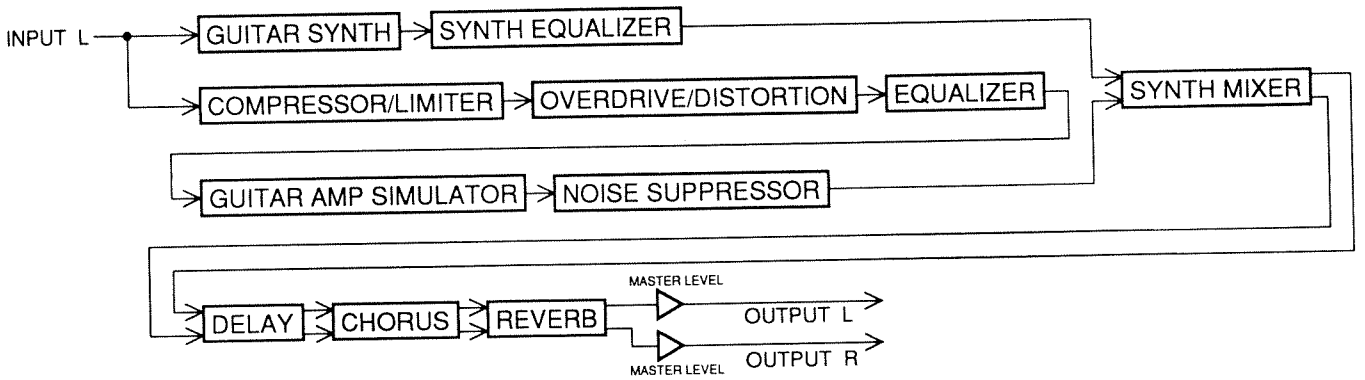

Guitar Synth*

Sens	: 0 to 50
Chromatic	: On/Off
Wave	: Saw/Square
Oct Shift	: -2/-1/0/+1
Sub OSC Pitch*	: -1200 to +100
Main OSC Level	: 0 to 100
Sub OSC Level	: 0 to 100
-1oct Mix	: 0 to 100
Portamento	: On/Off
Portamento Time	: 0 to 100
Vibrato Rate	: 0 to 100
Vibrato Depth	: 0 to 100
TVF Cutoff f*	: 0 to 100
TVF Resonance	: 0 to 100
TVF Depth	: -50 to +50
TVF Sens	: 0 to 100
TVF Attack	: 0 to 100
TVF Decay	: 0 to 100
TVF Sustain	: 0 to 100
TVF Release	: 0 to 100
TVA Sens	: 0 to 100
TVA Attack	: 0 to 100
TVA Decay	: 0 to 100
TVA Sustain	: 0 to 100
TVA Release	: 0 to 100
Hold*	: On/Off

Synth Equalizer*

Low EQ	: -20dB to +20dB
Low-Mid f	: 100Hz to 10.0kHz
Low-Mid Q	: 0.5 to 16
Low-Mid EQ	: -20dB to +20dB
High-Mid f	: 100Hz to 10.0kHz
High-Mid Q	: 0.5 to 16
High-Mid EQ	: -20dB to +20dB
High EQ	: -20dB to +20dB
Level	: -20dB to +20dB

Compressor/Limiter*

Mode	: Comp/Limiter
<Compressor>	
Sustain	: 0 to 100
Attack	: 0 to 100
<Limiter>	
Threshold	: 0 to 100
Release	: 0 to 100
Ratio	: 1.5: 1/2: 1/4: 1/100: 1
Tone	: -50 to +50
Level*	: 0 to 100

Overdrive/Distortion*

Mode	: Natural OD/Vintage OD/Turbo OD/ Crunch/Distortion/Metal 1/ Metal 2/Fuzz
Gain	: High/Low
Drive*	: 0 to 100
Tone	: -50 to +50
Level	: 0 to 100

Equalizer*

Low EQ	: -20dB to +20dB
Low-Mid f	: 100Hz to 10.0kHz
Low-Mid Q	: 0.5 to 16
Low-Mid EQ	: -20dB to +20dB
High-Mid f	: 100Hz to 10.0kHz
High-Mid Q	: 0.5 to 16
High-Mid EQ	: -20dB to +20dB
High EQ	: -20dB to +20dB
Level	: -20dB to +20dB

Guitar Amp Simulator*

Mode	: Small/Buitl In/2Stack/3Stack

Noise Suppressor

Threshold	: 0 to 100
Release	: 0 to 100
Level*	: 0 to 100

Synth Mixer

Synth Pan*	: L100 R0 to L0 R100
Synth Level*	: 0 to 100
Guitar Pan*	: L100 R0 to L0 R100
Guitar Level*	: 0 to 100

Delay*

Delay Time C	: 0 to 1200ms
Feedback	: 0 to 100
Level C*	: 0 to 100
Delay Time L	: 0 to 1200ms
Level L*	: 0 to 100
Delay Time R	: 0 to 1200ms
Level R*	: 0 to 100
LP Filter	: 500Hz to Thru

Chorus*

Mode	: Mono/Stereo
Rate*	: 0 to 100
Depth	: 0 to 100
Pre Delay	: 0.0 to 50.0ms
LP Filter	: 500Hz to Thru
Effect Level	: 0 to 100

Reverb*

Mode	: Room1/Room2/ Hall1/Hall2/Plate
Reverb Time	: 0.1 to 20.0s
Pre Delay	: 0 to 100ms
HP Filter	: Thru to 800Hz
LP Filter	: 500Hz to Thru
Direct Level	: 0 to 100
Effect Level*	: 0 to 100

Master

Level*	: 0 to 100

Assign 1 to 4

Target	: For parameters marked with an asterisk, Overall Effect On/Off for the algorithm, Metronome On/Off, Metronome Level, Tuner On/Off
Min	: -
Max	: -
Source	: Control 1 to 3/Exp Pedal/ MIDI After Touch/MIDI Pitch Bend/ MIDI CC#0 to 31, 64 to 119
Assign Mode	
Control 1	: Momentary/Latch
Control 1&2/1&3/2/3	: FS-5U Momentary/FS-5U Latch/ FS-5L Latch
MIDI After Touch/MIDI Pitch Bend/ MIDI CC#0 to 31, 64 to 119	: Momentary/Latch

133 Bass Synth

```
133 Bass Synth
-- Bass Synth --
```

A bass synthesizer algorithm. The synthesized sound and the bass sound can be mixed for output.

* ***This algorithm is designed to accept input on the L channel only. Be sure to connect your instrument to the L (MONO) jack.***
* ***If using the SE-70's internal tuner with this algorithm, be sure to set the Input Level knobs so the R knob is at the same position as the L knob.***

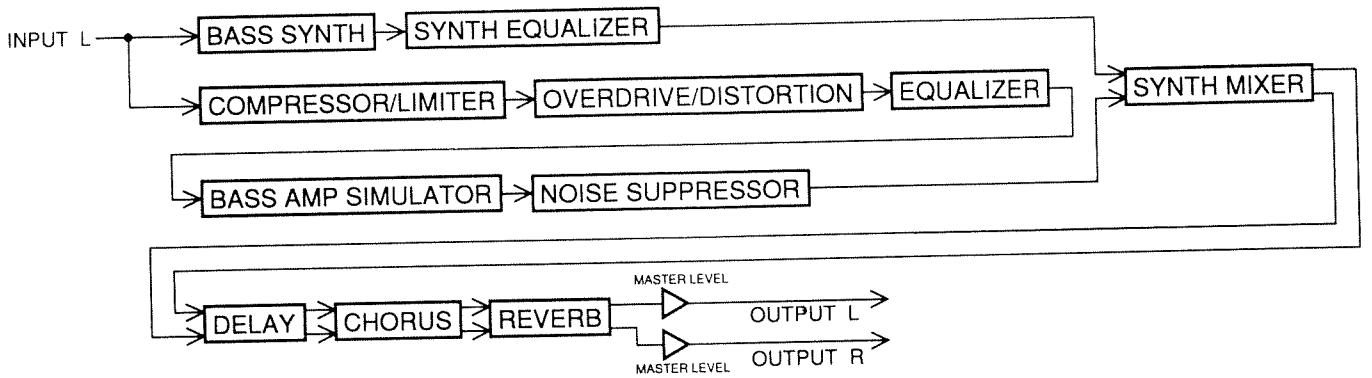

Bass Synth*

Sens	: 0 to 50
Chromatic	: On/Off
Wave	: Saw/Square
Oct Shift	: -2/-1/0/+1
Sub OSC Pitch*	: -1200 to +100
Main OSC Level	: 0 to 100
Sub OSC Level	: 0 to 100
-1oct Mix	: 0 to 100
Portamento	: On/Off
Portamento Time	: 0 to 100
Vibrato Rate	: 0 to 100
Vibarto Depth	: 0 to 100
TVF Cutoff f*	: 0 to 100
TVF Resonance	: 0 to 100
TVF Depth	: -50 to +50
TVF Sens	: 0 to 100
TVF Attack	: 0 to 100
TVF Decay	: 0 to 100
TVF Sustain	: 0 to 100
TVF Release	: 0 to 100
TVA Sens	: 0 to 100
TVA Attack	: 0 to 100
TVA Decay	: 0 to 100
TVA Sustain	: 0 to 100
TVA Release	: 0 to 100
Hold*	: On/Off

Synth Equalizer*

Low EQ	: -20dB to +20dB
Low-Mid f	: 100Hz to 10kHz
Low-Mid Q	: 0.5 to 16
Low-Mid EQ	: -20dB to +20dB
High-Mid f	: 100Hz to 10kHz
High-Mid Q	: 0.5 to 16
High-Mid EQ	: -20dB to +20dB
High EQ	: -20dB to +20dB
Level	: -20dB to +20dB

Compressor/Limiter*

Mode	: Comp/Limiter
<Compressor>	
Sustain	: 0 to 100
Attack	: 0 to 100
<Limiter>	
Threshold	: 0 to 100
Release	: 0 to 100
Ratio	: 1.5: 1/2: 1/4: 1/100: 1
Tone	: -50 to +50
Level*	: 0 to 100

Overdrive/Distortion*

Mode	: Overdrive/Distortion/Metal
Gain	: High/Low
Drive*	: 0 to 100
Tone	: -50 to +50
Direct Level	: 0 to 100
Effect Level	: 0 to 100

Equalizer*

Low EQ	: -20dB to +20dB
Low-Mid f	: 100Hz to 10kHz
Low-Mid Q	: 0.5 to 16
Low-Mid EQ	: -20dB to +20dB
High-Mid f	: 100Hz to 10kHz
High-Mid Q	: 0.5 to 16
High-Mid EQ	: -20dB to +20dB
High EQ	: -20dB to +20dB
Level	: -20dB to +20dB

Bass Amp Simulator*

Mode	: Small/Built In/Stack

Noise Suppressor

Threshold	: 0 to 100
Release	: 0 to 100
Level*	: 0 to 100

Synth Mixer

Synth Pan*	: L100 R0 to L0 R100
Synth Level*	: 0 to 100
Bass Pan*	: L100 R0 to L0 R100
Bass Level*	: 0 to 100

Delay*

Delay Time C	: 0 to 1200ms
Feedback	: 0 to 100
Level C*	: 0 to 100
Delay Time L	: 0 to 1200ms
Level L*	: 0 to 100
Delay Time R	: 0 to 1200ms
Level R*	: 0 to 100
LP Filter	: 500Hz to Thru

Chorus*

Mode	: Mono/Stereo
Rate*	: 0 to 100
Depth	: 0 to 100
Pre Delay	: 0.0 to 50.0ms
LP Filter	: 500Hz to Thru
Effect Level	: 0 to 100

Reverb*

Mode	: Room1/Room2/ Hall1/Hall2/Plate
Reverb Time	: 0.1 to 20.0s
Pre Delay	: 0 to 100ms
HP Filter	: Thru to 800Hz
LP Filter	: 500Hz to Thru
Direct Level	: 0 to 100
Effect Level*	: 0 to 100

Master

Level*	: 0 to 100

Assign 1 to 4

Target	: For parameters marked with an asterisk, Overall Effect On/Off for the algorithm, Metronome On/Off, Metronome Level, Tuner On/Off
Min	: -
Max	: -
Source	: Control 1 to 3/Exp Pedal/ MIDI After Touch/MIDI Pitch Bend/ MIDI CC#0 to 31, 64 to 119
Assign Mode	
Control 1	: Momentary/Latch
Control 1&2/1&3/2/3	: FS-5U Momentary/FS-5U Latch/ FS-5L Latch
MIDI After Touch/MIDI Pitch Bend/ MIDI CC#0 to 31, 64 to 119	: Momentary/Latch

134 2ch Mixer

```
134 2ch Mixer
--- 2ch Mixer --
```

A mixer that processes two channels. It provides for use of EQ and noise suppression for each channel. At the next stage, it allows reverb, delay, and chorus to be applied.

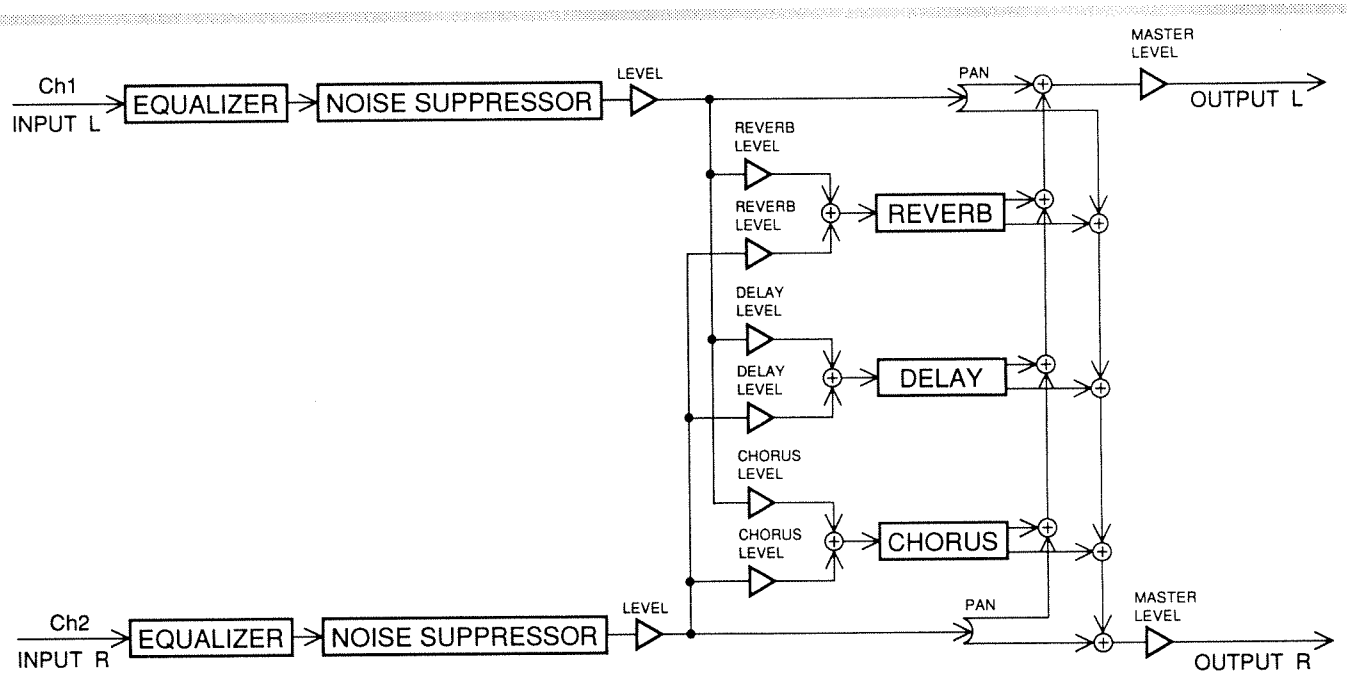

Ch1 Equalizer*

Low EQ	: -20dB to +20dB
Low-Mid f	: 100Hz to 10.0kHz
Low-Mid Q	: 0.5 to 16
Low-Mid EQ	: -20dB to +20dB
High-Mid f	: 100Hz to 10.0kHz
High-Mid Q	: 0.5 to 16
High-Mid EQ	: -20dB to +20dB
High EQ	: -20dB to +20dB
Level	: -20dB to +20dB

Ch2 Equalizer*

Low EQ	: -20dB to +20dB
Low-Mid f	: 100Hz to 10.0kHz
Low-Mid Q	: 0.5 to 16
Low-Mid EQ	: -20dB to +20dB
High-Mid f	: 100Hz to 10.0kHz
High-Mid Q	: 0.5 to 16
High-Mid EQ	: -20dB to +20dB
High EQ	: -20dB to +20dB
Level	: -20dB to +20dB

Ch1

Noise Suppressor Threshold	: 0 to 100
Noise Suppressor Release	: 0 to 100
Delay Level (SEND)*	: 0 to 100
Chorus Level (SEND)*	: 0 to 100
Reverb Level (SEND)*	: 0 to 100
Pan*	: L100 R0 to L0 R100
Level*	: 0 to 100

Ch2

Noise Suppressor Threshold	: 0 to 100
Noise Suppressor Release	: 0 to 100
Delay Level (SEND)*	: 0 to 100
Chorus Level (SEND)*	: 0 to 100
Reverb Level (SEND)*	: 0 to 100
Pan*	: L100 R0 to L0 R100
Level*	: 0 to 100

Delay

Delay Time C	: 0 to 600ms
Feedback	: 0 to 100
Level C	: 0 to 100
Delay Time L	: 0 to 600ms
Level L	: 0 to 100
Delay Time R	: 0 to 600ms
Level R	: 0 to 100
LP Filter	: 500Hz to Thru

Chorus

Mode	: Mono/Stereo
Rate*	: 0 to 100
Depth	: 0 to 100
Pre Delay	: 0 to 50.0ms
LP Filter	: 500Hz to Thru
Effect Level	: 0 to 100

Reverb

Mode	: Room1/Room2/ Hall1/Hall2/Plate
Reverb Time	: 0.1 to 20.0s
Pre Delay	: 0 to 100ms
HP Filter	: Thru to 800Hz
LP Filter	: 500Hz to Thru
Effect Level	: 0 to 100

Master

Level*	: 0 to 100

Assign 1 to 4

Target	: For parameters marked with an asterisk, Overall Effect On/Off for the algorithm, Metronome On/Off, Metronome Level, Tuner On/Off
Min	: -
Max	: -
Source	: Control 1 to 3/Exp Pedal/ MIDI After Touch/MIDI Pitch Bend/ MIDI CC#0 to 31, 64 to 119
Assign Mode	
Control 1	: Momentary/Latch
Control 1&2/1&3/2/3	: FS-5U Momentary/FS-5U Latch/ FS-5L Latch
MIDI After Touch/MIDI Pitch Bend/ MIDI CC#0 to 31, 64 to 119	: Momentary/Latch

135 Hum Canceler

```
135 Hum Canceler
- Hum Canceler -
```

Used to remove hum.

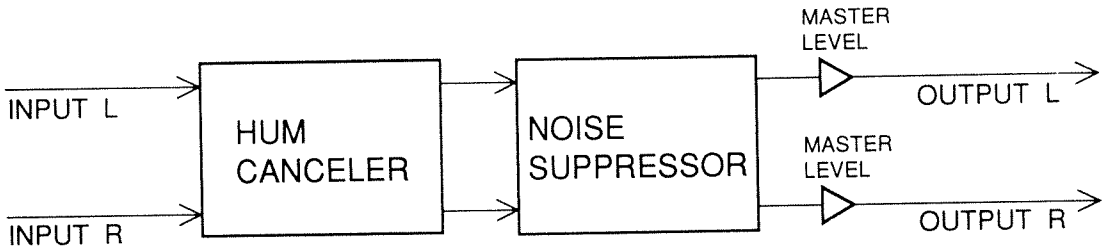

Hum Canceler*

Threshold	: 0 to 100
Frequency	: 40.0 to 80.0Hz

Noise Suppressor*

Threshold	: 0 to 100
Release	: 0 to 100

Master

Level*	: 0 to 100

Assign 1 to 4

Target : For parameters marked with an asterisk, Overall Effect On/Off for the algorithm, Metronome On/Off, Metronome Level, Tuner On/Off

Min : -

Max : -

Source : Control 1 to 3/Exp Pedal/ MIDI After Touch/MIDI Pitch Bend/ MIDI CC#0 to 31, 64 to 119

Assign Mode

Control 1 : Momentary/Latch

Control 1&2/1&3/2/3 : FS-5U Momentary/FS-5U Latch/ FS-5L Latch

MIDI After Touch/MIDI Pitch Bend/ MIDI CC#0 to 31, 64 to 119 : Momentary/Latch

136 Vocal Canceler

```
136 Vo Canceler
--- Vo Canceler -
```

Allows for audio signals that originally were localized in the center of the stereo field to be eliminated. This allows you to remove the vocals from audio sources that you input (such as from a CD) and obtain a "minus-one" effect.

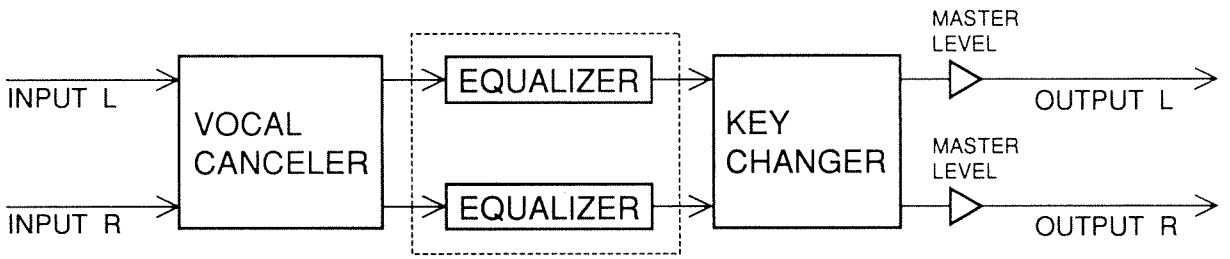

Vocal Canceler*

Balance	: L100 R0 to L0 R100

Equalizer*

Low EQ	: -20dB to +20dB
Low-Mid f	: 100Hz to 10.0kHz
Low-Mid Q	: 0.5 to 16
Low-Mid EQ	: -20dB to +20dB
High-Mid f	: 100Hz to 10.0kHz
High-Mid Q	: 0.5 to 16
High-Mid EQ	: -20dB to +20dB
High EQ	: -20dB to +20dB
Level	: -20dB to +20dB

Key Changer*

Mode	: 1/2/3/4
Key*	: -12 to +12
Fine	: -50 to +50

Master

Level*	: 0 to 100

Assign 1 to 4

Target	: For parameters marked with an asterisk, Overall Effect On/Off for the algorithm, Metronome On/Off, Metronome Level, Tuner On/Off
Min	: -
Max	: -
Source	: Control 1 to 3/Exp Pedal/ MIDI After Touch/MIDI Pitch Bend/ MIDI CC#0 to 31, 64 to 119
Assign Mode	
Control 1	: Momentary/Latch
Control 1&2/1&3/2/3	: FS-5U Momentary/FS-5U Latch/ FS-5L Latch
MIDI After Touch/MIDI Pitch Bend/ MIDI CC#0 to 31, 64 to 119	: Momentary/Latch

137 Sampler 1

```
137 Sampler 1
--- Sampler 1 --
```

Provides for up to 2,000 ms of sampling time.

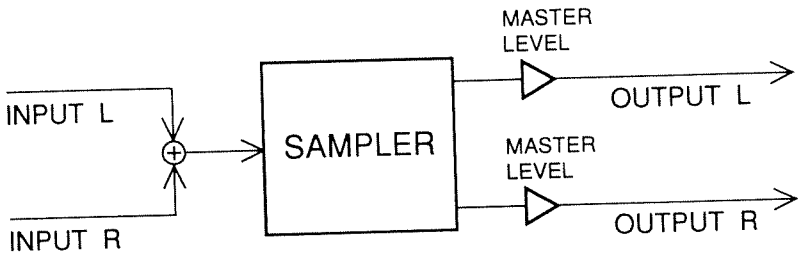

Sampler

Recording	: –
Trigger Level	: 0 to 80
Trigger Mode	: Auto/Manual
Pre Trigger	: 0 to 300ms
Pitch	: -12 to +12
Fine	: -50 to +50
Play Mode	: Trig/Gate
Play Time	: 100 to 2000ms
Attack	: 0 to 100
Decay	: 0 to 100
Original Key	: Off/C1 to C7

Master

Level*	: 0 to 100

Assign 1 to 4

Target : Trigger,Master Level, Overall Effect On/Off for the algorithm, Metronome On/Off, Metronome Level, Tuner On/Off

Min : -

Max : -

Source : Control 1 to 3/Exp Pedal/ MIDI After Touch/MIDI Pitch Bend/ MIDI CC#0 to 31, 64 to 119

Assign Mode

Control 1 : Momentary/Latch

Control 1&2/1&3/2/3 : FS-5U Momentary/FS-5U Latch/ FS-5L Latch

MIDI After Touch/MIDI Pitch Bend/ MIDI CC#0 to 31, 64 to 119 : Momentary/Latch

138 Sampler 2

```
138 Sampler 2
--- Sampler 2 --
```

This sampler specializes in reverse playback.

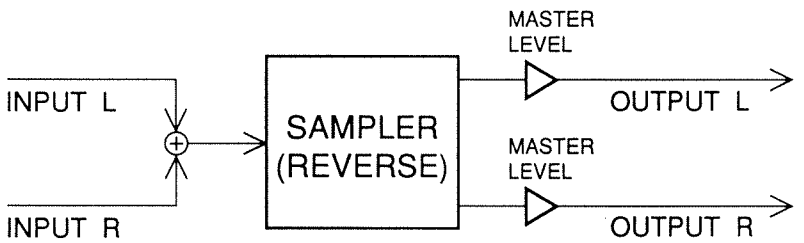

Sampler

Recording	: –
Trigger Level	: 0 to 80
Trigger Mode	: Auto/Manual
Pre Trigger	: 0 to 300ms
Pitch	: -12 to +12
Fine	: -50 to +50
Play Mode	: Trig/Gate
Play Time	: 100 to 2000ms
Attack	: 0 to 100
Decay	: 0 to 100
Original Key	: Off/C1 to C7

Master

Level*	: 0 to 100

Assign 1 to 4

Target	: Trigger,Master Level, Overall Effect On/Off for the algorithm, Metronome On/Off, Metronome Level, Tuner On/Off
Min	: -
Max	: -
Source	: Control 1 to 3/Exp Pedal/ MIDI After Touch/MIDI Pitch Bend/ MIDI CC#0 to 31, 64 to 119
Assign Mode	
Control 1	: Momentary/Latch
Control 1&2/1&3/2/3	: FS-5U Momentary/FS-5U Latch/ FS-5L Latch
MIDI After Touch/MIDI Pitch Bend/ MIDI CC#0 to 31, 64 to 119	: Momentary/Latch

139 Repeat Play

```
139 Repeat Play
--- Repeat Play -
```

This sampler is designed to be used in real time.

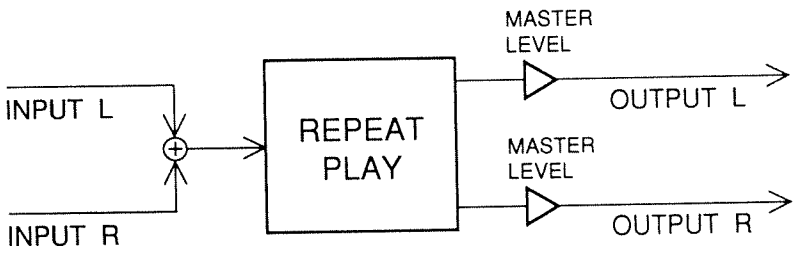

Repeat Play

Monitor	: –
Trigger Level	: 0 to 80
Trigger Mode	: Auto/Manual
Reverse Play	: On/Off
Play Time	: 100 to 2000ms
Interval	: 0.02ms to 20.00sec
Repeat Count	: 1 to 20/∞
Attack	: 0 to 100
Decay	: 0 to 100
Bass	: -12dB to +12dB
Treble	: -12dB to +12dB
Direct Level	: 0 to 100
Effect Level*	: 0 to 100

Master

Level*	: 0 to 100

Assign 1 to 4

Target : Trigger,Master Level, Overall Effect On/Off for the algorithm, Metronome On/Off, Metronome Level, Tuner On/Off

Min : -

Max : -

Source : Control 1 to 3/Exp Pedal/ MIDI After Touch/MIDI Pitch Bend/ MIDI CC#0 to 31, 64 to 119

Assign Mode

Control 1 : Momentary/Latch

Control 1&2/1&3/2/3 : FS-5U Momentary/FS-5U Latch/ FS-5L Latch

MIDI After Touch/MIDI Pitch Bend/ MIDI CC#0 to 31, 64 to 119 : Momentary/Latch

Algorithms Geared for Use With a Mixer

Since the SE-70 processes input in stereo, separate effects can be applied independently to the left and right channels. This makes the unit quite effective when connected with a mixer that is equipped with two or more send/returns.

Output Mode

The algorithms numbered from 140 to 145 carry a parameter known as the "Output Mode." This parameter allows you to select the mode of output you wish to use with respect to each of the channels.

Mono+Mono: The effect sound will be in mono on each channel and output independently.

Stereo Mix: The effect sound for each channel will be preserved in stereo and mixed before being output.

Make the connections in accord with either of the examples shown below, depending on the Output Mode you have selected.

Mode:Mono+Mono

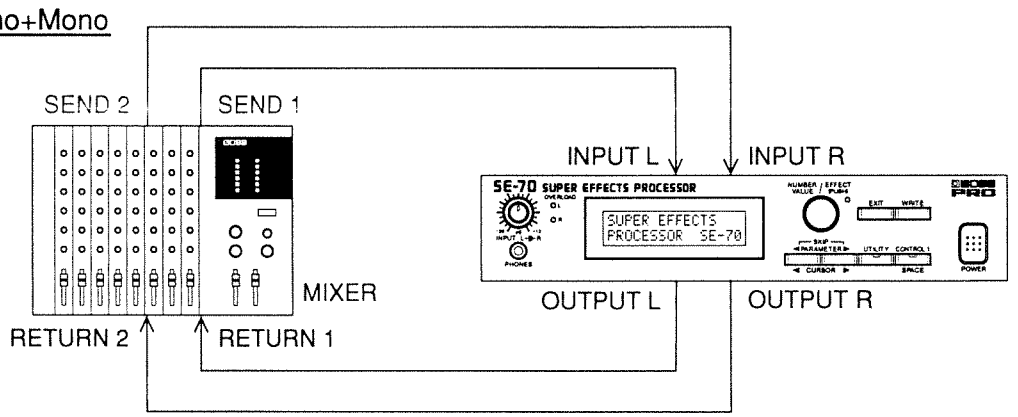

Mode:Stereo Mix

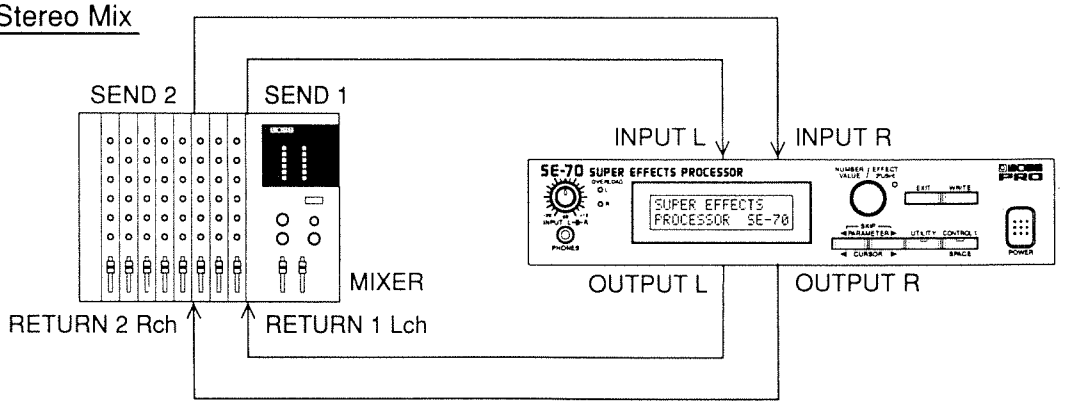

Always choose the Output Mode which is appropriate to your application.

140 Hall + Room

```
140 Hall+Room
---- Hall+Room ---
```

Allows hall reverb and room reverb to be applied independently to each channel.

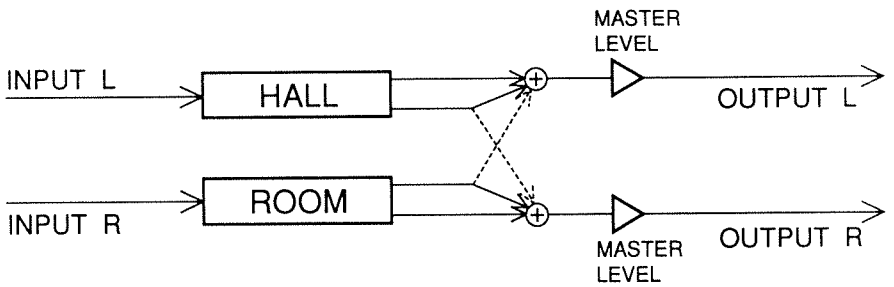

Hall Reverb*

Reverb Time	: 0.1 to 20.0s
Pre Delay	: 0 to 400ms
HP Filter	: Thru to 800Hz
LP Filter	: 500Hz to Thru
Effect Level*	: 0 to 100

Room Reverb*

Reverb Time	: 0.1 to 20.0s
Pre Delay	: 0 to 100ms
HP Filter	: Thru to 800Hz
LP Filter	: 500Hz to Thru
Effect Level*	: 0 to 100

Output Mode

: Stereo Mix/Mono+Mono

Direct

Level L	: 0 to 100
Level R	: 0 to 100

Master

Level*	: 0 to 100

Assign 1 to 4

Target : For parameters marked with an asterisk, Overall Effect On/Off for the algorithm, Metronome On/Off, Metronome Level, Tuner On/Off

Min : -

Max : -

Source : Control 1 to 3/Exp Pedal/ MIDI After Touch/MIDI Pitch Bend/ MIDI CC#0 to 31, 64 to 119

Assign Mode

Control 1 : Momentary/Latch

Control 1&2/1&3/2/3 : FS-5U Momentary/FS-5U Latch/ FS-5L Latch

MIDI After Touch/MIDI Pitch Bend/ MIDI CC#0 to 31, 64 to 119 : Momentary/Latch

141 Reverb + Delay

```
141 Rev+Delay
--- Rev+Delay --
```

Allows reverb and delay to be applied independently to each channel.

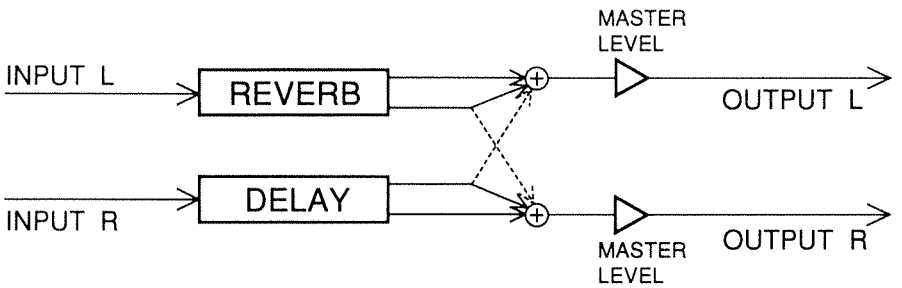

Reverb*

Mode	: Room1/Room2/ Hall1/Hall2/Plate
Reverb Time	: 0.1 to 20.0s
Pre Delay	: 0 to 100ms
HP Filter	: Thru to 800Hz
LP Filter	: 500Hz to Thru
Effect Level*	: 0 to 100

Delay*

Delay Time C	: 0 to 400ms
Feedback	: 0 to 100
Level C*	: 0 to 100
Delay Time L	: 0 to 400ms
Level L*	: 0 to 100
Delay Time R	: 0 to 400ms
Level R*	: 0 to 100
LP Filter	: 500Hz to Thru

Output Mode

: Stereo Mix/Mono+Mono

Direct

Level L	: 0 to 100
Level R	: 0 to 100

Master

Level*	: 0 to 100

Assign 1 to 4

Target	: For parameters marked with an asterisk, Overall Effect On/Off for the algorithm, Metronome On/Off, Metronome Level, Tuner On/Off
Min	: -
Max	: -
Source	: Control 1 to 3/Exp Pedal/ MIDI After Touch/MIDI Pitch Bend/ MIDI CC#0 to 31, 64 to 119
Assign Mode	
Control 1	: Momentary/Latch
Control 1&2/1&3/2/3	: FS-5U Momentary/FS-5U Latch/ FS-5L Latch
MIDI After Touch/MIDI Pitch Bend/ MIDI CC#0 to 31, 64 to 119	: Momentary/Latch

142 Reverb + Chorus

```
142 Rev+Chorus
-- Rev+Chorus --
```

Allows reverb and chorus to be applied independently to each channel.

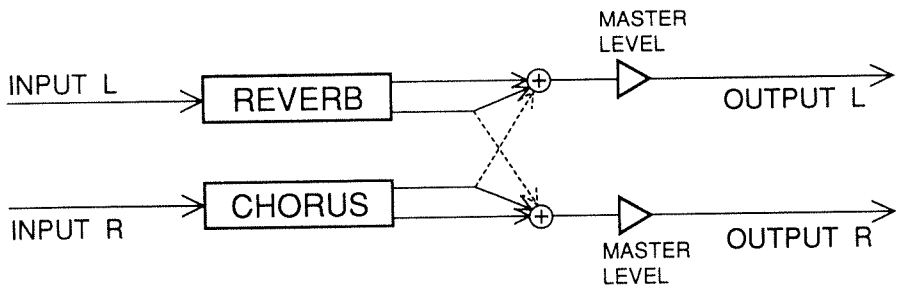

Reverb*

Mode	: Room1/Room2/ Hall1/Hall2/Plate
Reverb Time	: 0.1 to 20.0s
Pre Delay	: 0 to 100ms
HP Filter	: Thru to 800Hz
LP Filter	: 500Hz to Thru
Effect Level*	: 0 to 100

Chorus*

Mode	: Mono/Stereo1/Stereo2
Rate*	: 0 to 100
Depth	: 0 to 100
Pre Delay	: 0 to 50.0ms
LP Filter	: 500Hz to Thru
Effect Level	: 0 to 100

Output Mode

: Stereo Mix/Mono+Mono

Direct

Level L	: 0 to 100
Level R	: 0 to 100

Master

Level*	: 0 to 100

Assign 1 to 4

Target	: For parameters marked with an asterisk, Overall Effect On/Off for the algorithm, Metronome On/Off, Metronome Level, Tuner On/Off
Min	: -
Max	: -
Source	: Control 1 to 3/Exp Pedal/ MIDI After Touch/MIDI Pitch Bend/ MIDI CC#0 to 31, 64 to 119

Assign Mode

Control 1 : Momentary/Latch

Control 1&2/1&3/2/3

: FS-5U Momentary/FS-5U Latch/ FS-5L Latch

MIDI After Touch/MIDI Pitch Bend/ MIDI CC#0 to 31, 64 to 119

: Momentary/Latch

143 Reverb + Pitch Shift

```
143 Rev+P Shift
-- Rev+P Shift -
```

Allows reverb and pitch shifting to be applied independently to each channel.

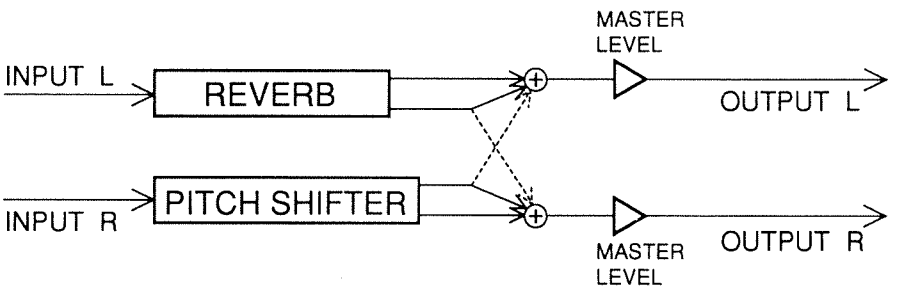

Reverb*

Mode	: Room1/Room2/ Hall1/Hall2/Plate
Reverb Time	: 0.1 to 20.0s
Pre Delay	: 0 to 100ms
HP Filter	: Thru to 800Hz
LP Filter	: 500Hz to Thru
Effect Level*	: 0 to 100

Pitch Shifter*

Pitch Shifter 1 to 4 Mode	: 1/2/3/4/5/ Inv1/Inv2
Pitch Shifter 1 to 4 Pitch*	: -24 to +24
Pitch Shifter 1 to 4 Fine	: -50 to +50
Pitch Shifter 1 to 4 Pre Delay	: 0 to 300ms
Pitch Shifter 1 Feedback	: 0 to 100
Pitch Shifter 1 to 4 Pan	: L100 R0 to L0 R100
Pitch Shifter 1 to 4 Level	: 0 to 100

Output Mode

: Stereo Mix/Mono+Mono

Direct

Level L	: 0 to 100
Level R	: 0 to 100

Master

Level*	: 0 to 100

Assign 1 to 4

Target	: For parameters marked with an asterisk, Overall Effect On/Off for the algorithm, Metronome On/Off, Metronome Level, Tuner On/Off
Min	: -
Max	: -
Source	: Control 1 to 3/Exp Pedal/ MIDI After Touch/MIDI Pitch Bend/ MIDI CC#0 to 31, 64 to 119
Assign Mode	
Control 1	: Momentary/Latch
Control 1&2/1&3/2/3	: FS-5U Momentary/FS-5U Latch/ FS-5L Latch
MIDI After Touch/MIDI Pitch Bend/ MIDI CC#0 to 31, 64 to 119	: Momentary/Latch

144 Reverb + Gate Reverb

```
144 Rev+Gate
---- Rev+Gate ----
```

Allows reverb and gate reverb to be applied independently to each channel.

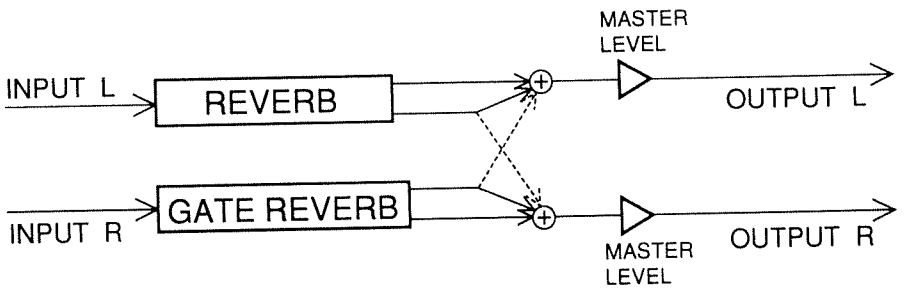

Reverb*

Mode	: Room1/Room2/Hall1/ Hall2/Plate
Reverb Time	: 0.1 to 20.0s
Pre Delay	: 0 to 100ms
HP Filter	: Thru to 800Hz
LP Filter	: 500Hz to Thru
Effect Level*	: 0 to 100

Gate Reverb*

Gate Time	: 0 to 500ms
Pre Delay	: 0 to 100ms
HP Filter	: Thru to 800Hz
LP Filter	: 500Hz to Thru
Effect Level*	: 0 to 100

Output Mode

: Stereo Mix/Mono+Mono

Direct

Level L	: 0 to 100
Level R	: 0 to 100

Master

Level*	: 0 to 100

Assign 1 to 4

Target	: For parameters marked with an asterisk, Overall Effect On/Off for the algorithm, Metronome On/Off, Metronome Level, Tuner On/Off
Min	: -
Max	: -
Source	: Control 1 to 3/Exp Pedal/ MIDI After Touch/MIDI Pitch Bend/ MIDI CC#0 to 31, 64 to 119

Assign Mode

Control 1 : Momentary/Latch

Control 1&2/1&3/2/3

: FS-5U Momentary/FS-5U Latch/ FS-5L Latch

MIDI After Touch/MIDI Pitch Bend/ MIDI CC#0 to 31, 64 to 119

: Momentary/Latch

145 Delay + Chorus

```
145 Delay+Chorus
- Delay+Chorus -
```

Allows delay and chorus to be applied independently to each channel.

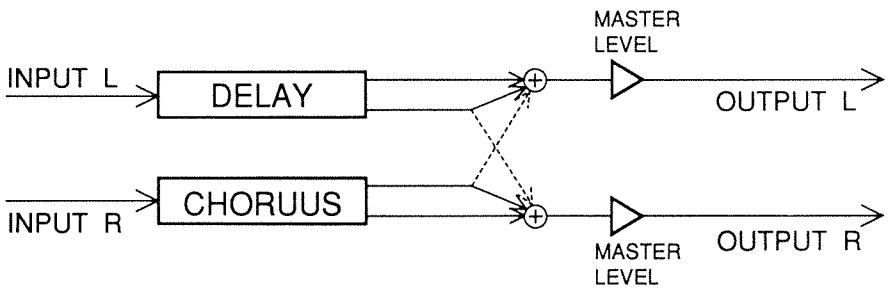

Delay*

Delay Time C	: 0 to 1200ms
Feedback	: 0 to 100
Level C*	: 0 to 100
Delay Time L	: 0 to 1200ms
Level L*	: 0 to 100
Delay Time R	: 0 to 1200ms
Level R*	: 0 to 100
LP Filter	: 500Hz to Thru

Chorus*

Mode	: Mono/Stereo1/Stereo2
Rate*	: 0 to 100
Depth	: 0 to 100
Pre Delay	: 0 to 50.0ms
LP Filter	: 500Hz to Thru
Effect Level	: 0 to 100

Output Mode

: Stereo Mix/Mono+Mono

Direct

Level L	: 0 to 100
Level R	: 0 to 100

Master

Level*	: 0 to 100

Assign 1 to 4

Target	: For parameters marked with an asterisk, Overall Effect On/Off for the algorithm, Metronome On/Off, Metronome Level, Tuner On/Off
Min	: -
Max	: -
Source	: Control 1 to 3/Exp Pedal/ MIDI After Touch/MIDI Pitch Bend/ MIDI CC#0 to 31, 64 to 119
Assign Mode	
Control 1	: Momentary/Latch
Control 1&2/1&3/2/3	: FS-5U Momentary/FS-5U Latch/ FS-5L Latch
MIDI After Touch/MIDI Pitch Bend/ MIDI CC#0 to 31, 64 to 119	: Momentary/Latch

How Each of the Parameters Works

On the SE-70, new sounds are created by supplying values for the parameters that go with each effect. This section explains what is produced by each effect, as well as how the individual parameters work.

** Note that "Direct Sound" refers to the original input signal. "Effect Sound" refers to the sound after it has been processed by the effects.*

Reverb and Delay

Reverb

Reverberation is produced as the result of a combination of numerous reflected sounds. For example, if you clap your hands in a large enclosed space (such as a gymnasium), you will hear the sound 'bounce around' for a short while and then die away. Reverberation refers to sound which lingers on for a while in this way.
A number of factors determine the character of a particular reverberation. These include the size (hall, room, etc.) and shape of the space in which it is produced, as well as the type of material making up the reflective surfaces (walls, etc.). The SE–70 is equipped with the ability to digitally simulate all these factors.

Now let's take a closer look at reverberation.

Types of Reflected Sounds

In analyzing everyday sounds we find that they can be divided into three portions: Direct Sound, Early Reflections, and Late Reflections. The direct sound is the sound which travels in a straight line from the source to reach the listener. Early reflections are the sounds which have been reflected back one or more times from walls, etc. Late reflections are diffused sounds which have been reflected numerous times before reaching the listener.

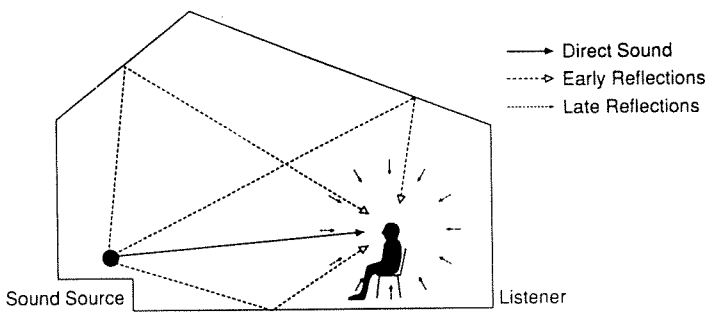

Direct Sound :Sound traveling in a straight line from the source to reach the listener.
Early Reflections :Sounds reflected back one or more times from the walls/ceiling.
Late Reflections :Diffused sounds which have reflected numerous times before reaching the listener.

The listener will hear sound in this order:

Direct soundearly reflections, then late reflections.

Relationship Between Reflections and Time

Reflected sounds reach the listener in this manner:

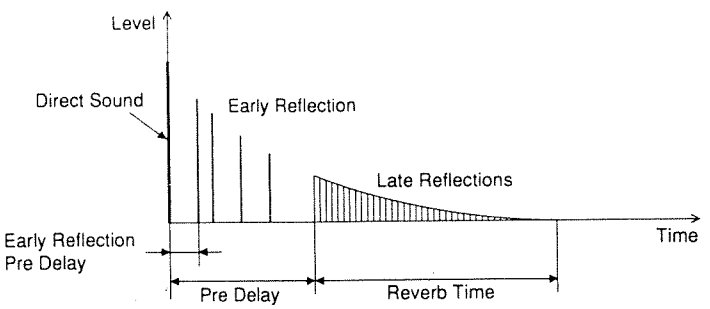

Early Reflection Pre Delay : Time it takes before the early reflections are heard

The early reflection delay is the amount of time it takes for the early reflections to arrive, calculated from the instant the direct sound has begun. The pre delay is the amount of time it takes after the direct sound has been produced before the late reflections become apparent. The reverb time is the time it takes for the sound to fade away.
Reverberation consists of a complex mixture of all these elements.

Other Factors

In addition to the factors explained above, the character of a sound is also influenced by the type of material that the reflecting surfaces are made of (HF Damp, LF Damp). The application of a filter to the late reflections also affects the sound.

HF Damp

As a result of differences in the material of reflecting surfaces, the manner in which upper frequencies are attenuated (cut) also changes. The HF Damp parameter controls the manner in which this attenuation will occur. The more the value is decreased, the more intense the damping effect becomes.

LF Damp

Due to differences in the material of reflecting surfaces, the lower frequencies will also be attenuated differently. The LF Damp parameter controls this attenuation. The more the value is decreased, the more intense the damping effect becomes.

High Pass Filter

Cuts the lower frequency content while allowing the higher frequencies to pass through.

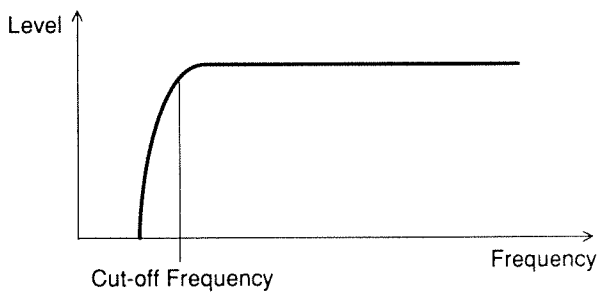

Low Pass Filter

Cuts the higher frequency content while allowing the lower frequencies to pass through.

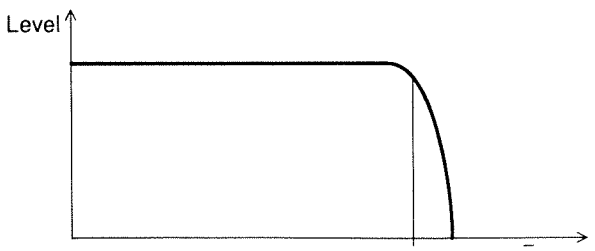

Mode

Provides selection of the type of reverb. This parameter is available only with compound algorithms.

Room 1: A standard room reverb.

Room 2: A room reverb providing a softer tone than Room 1.

Hall 1: A standard hall reverb.

Hall 2: A hall reverb providing a softer tone than Hall 1.

Plate : Simulates a 'plate' reverb.

**** As a general guideline, when the reverb time required is less than 2 seconds, a room reverb is recommended. When it is greater than 2 seconds, a hall or plate are more effective.***

Reverb Time

Adjusts the length of the reverb sound.

Pre Delay

Adjusts the amount of time occurring before the reverb sound is heard.

Early Reflection Delay

Adjusts the delay for the early reflected sounds.

Early Reflection Mix Level

Adjusts the volume of the early reflected sounds.

HF Damp

Adjusts the degree to which HF damping will be applied. The more the value is decreased, the more intense the damping becomes. At '0' there will be no damping.

LF Damp

Adjusts the degree to which LF damping will be applied. The more the value is decreased, the more intense the damping becomes. At '0' there will be no damping.

High Pass Filter

Adjusts the frequency at which the high pass filter begins to work. When set to Thru, the high pass filter is inactive.

Low Pass Filter

Adjusts the frequency at which the low pass filter begins to work. When set to Thru, the low pass filter is inactive.

Diffusion

Adjusts the diffusion of the reverb sound.

Density

Attack
Adjusts the prominence of the attack of the reverb sound.

Bass
Adjusts the tone of the lower range of the reverb sound.

Treble
Adjusts the tone of the upper range of the reverb sound.

Direct Level
Adjusts the volume of the direct sound.

Effect Level
Adjusts the volume of the reverb sound.

* ***When using Room 2, independent settings can be made for each of the early reflections (1, 2, 3) (for both channels) for the Early Reflection Delay and Early Reflection Mix Level.***
  The symbols representing these settings (L1, L2, L3, R1, R2, R3) will appear along with the parameter name.

Gate Reverb

This algorithm mutes the reverberating sounds part way through the natural decay. It supports full stereo processing. The effect can be made even more unique by adding Accent Delay, Accent Level.

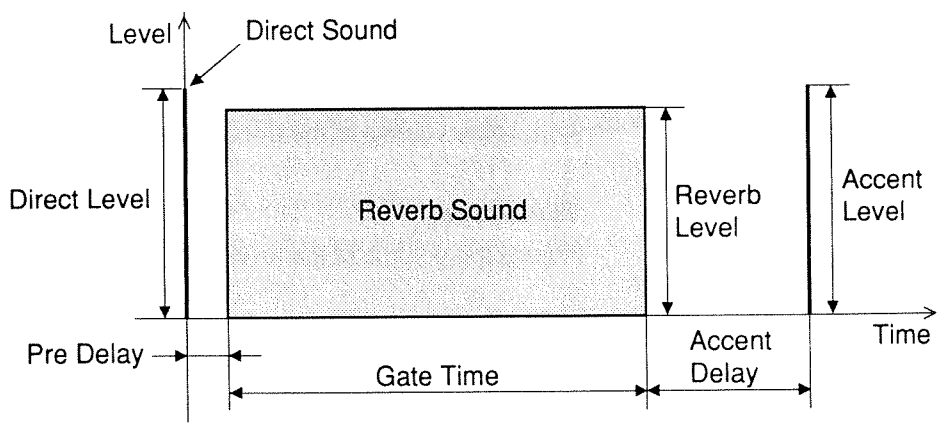

Gate Time
Adjusts the amount of time from when the reverb sound begins to appear until it is muted.

Pre Delay

Mode (Gate Mode)

Selection for the manner in which the gate reverb is to be applied.

Normal: A standard gate reverb.

Left → Right: The gate reverb sound moves from the left to the right.

Right → Left: The gate reverb sound moves from the right to the left.

Reverse 1: A standard reverse gate.

Reverse 2: A reverse gate in which the reverb sound falls in the middle.

**** When using the "Left → Right" or "Right → Left" mode, you must input an identical signal to both the L and R channels.***

Thickness

Adjusts the thickness of the reverb sound.

Density

Adjusts the density of the reverb sound.

Accent Delay

Adjusts the amount of time from when the reverb sound is muted until the accent sound is output.

Accent Level

Adjusts the volume of the accent sound.

Bass

Adjusts the tone of the lower range.

Treble

Adjusts the tone of the upper range.

Direct Level

Adjusts the volume of the direct sound.

Effect Level

Adjusts the volume of the reverb sound (including accent).

Ambiance

Simulates the effect obtained when using an "ambiance microphone." (A microphone used during recording that is placed at a distance from the sound source.) This reverb focuses on spaciousness and depth, rather than being concerned only with the reverberant sounds.

Pre Delay

Adjusts the amount of time to pass before the reverb sound is output.

Early Reflection Delay
Adjusts the delay of the early reflected sound.

Early Reflection Mix Level
Adjusts the volume of the early reflected sound.

Diffusion
Adjusts the diffusion. The diffusion increases as the value increases.

Bass
Adjusts the tone of the lower range for the ambient sound.

Treble
Adjusts the tone of the upper range ambient sound.

Direct Level
Adjusts the volume of the direct sound.

Effect Level
Adjusts the volume of ambient sound.

Delay

Produces a specialized effect by adding delayed portions of the direct sound back into the direct sound.

Delay Time
Adjusts the delay time.

Feedback, FB Level (Feedback Level)
Feedback involves sending the delayed signals back into the effect input for further delay. This setting controls the signal level that is returned. As the value is increased, there will be a greater number of delay repetitions.
**** If feedback is set too high, oscillation may occur.***

Feedback Delay
Adjusts the rate of repetition for the 20Tap Delay algorithm.

Modulation Wave
Selects the waveform for the LFO used for applying modulation with the Modulation Delay algorithm.
Tri (triangular wave): A smooth modulation is applied.
Sin (sine wave): A unique modulation is applied.

Rate

Adjusts the rate at which the delay will be modulated for the Modulation Delay algorithm.

Depth

Adjusts the depth at which the delay will be modulated for the Modulation Delay algorithm.

Polarity

Selects the phase of the modulation (LFO) for left and right channels with the Modulation Delay algorithm.

Inverse : The phase for left and right channels is inverted, producing an expansive effect.

Synchro : The phase of left and right channels output an equal sound.

Ducking

Turns the Ducking effect On/Off for the Guitar Multi 3 algorithm. When ON, the volume of the delay is altered to correspond with the volume of the direct sound. When the input level is high, the delay sound is low. When the input level decreases, the delay sound level increases. This is known as the 'ducking' effect.

Ducking Sens

Adjusts the sensitivity of the ducking effect relative to the input for the Guitar Multi 3 algorithm.

Ducking Depth

Adjusts the amount by which the delay sound will be altered as a result of the ducking effect for the Guitar Multi 3 algorithm. The greater the value, the more the delay sound will decrease while the ducking effect is being used.

Rise Time (Ducking Rise Time)

Adjusts the amount of time it takes for the delay sound to reach the specified amplitude after it has begun to be produced for the Guitar Multi 3 algorithm.

HF Damp

Adjusts the degree to which HF damping will be applied. The more the value is decreased, the more intense the damping becomes. At '0' there will be no damping.

**** This parameter will be effective even when Feedback is set to "0."***

LF Damp

Adjusts the degree to which LF damping will be applied. The more the value is decreased, the more intense the damping becomes. At '0' there will be no damping.

**** This parameter will be effective even when Feedback is set to "0."***

Bass
Adjusts the tone of the lower range of the delay sound.

Treble
Adjusts the tone of the upper range of the delay sound.

Low Pass Filter
Adjusts the frequency at which the low pass filter begins to work. When set to Thru, the low pass filter is inactive.

Pan
Adjusts the localization of the sound image for the delay sound.

Direct Pan
Adjusts the localization of the sound image for the direct sound.

Tap Level
Adjusts the volume of the output from each tap for the 20Tap Delay algorithm.

Direct Level
Adjusts the volume of the direct sound.

Effect Level, Level
Adjusts the volume of the delay.

Cross Feedback
The delay signal can also be fed back into the other channel. This setting adjusts the feedback level.
**** If cross feedback is set too high, oscillation may occur.***

**** Certain algorithms provide parameters which allow settings to be made independently for the left and right channels and the center of the sound field. The letters L, R, C appear for such parameters.***

L: Left
R: Right
C: Center

**** With 20Tap Delay, settings for Delay Time, Pan, and Tap Level can be made for each delay line.***
For these three parameters, the line number will be indicated as a number from 1 to 20.

Modulation Type Effects

Chorus

An effect that adds 'diffusion' and thickness to a sound.

Mode

Selection for the chorus mode.
Note the following when 2 Stage /4 Stage /8 Stage /16 Stage or 16 Manual has been selected (Super Chorus):
When 2 Stage /4 Stage /8 Stage /16 Stage is selected, the Pre Delay and Depth for all stages will be set to the same value. The 16 Manual mode, however, allows for a complete range of precision settings. It accepts settings for Pre Delay and Depth (comprised of 8 sets of data) which can be made with respect to 2 stages which have a 180 degree phase differential.

Mono: Monophonic chorus.
Stereo, Stereo 1: 2-stage stereo chorus.
Stereo 2: 4-stage stereo chorus.

Rate

Adjusts the rate of chorus modulation.

Depth

Adjusts the depth of chorus modulation.

Pre Delay

Adjusts the length of time between the start of the direct sound and the beginning of the chorus sound.

Crossover f (Crossover Frequency)

Sets the dividing frequency between the high and low bands of the Band Chorus algorithm.

Low Rate

Adjusts the rate at which the low band of the Band Chorus algorithm is modulated .

Low Depth

Adjusts the depth at which the low band of the Band Chorus algorithm is modulated.

Low Pre Delay

Adjusts the length of time between the start of the direct sound and the beginning of the low band chorus sound for the Band Chorus algorithm.

Low Level

Adjusts the volume of the low band chorus sound of the Band Chorus algorithm.

High Rate

High Depth

Adjusts the depth to which the high band of the Band Chorus algorithm is modulated.

High Pre Delay

Adjusts the length of time between the start of the direct sound and the beginning of the high band chorus sound for the Band Chorus algorithm.

High Level

Adjusts the volume of the high band chorus sound of the Band Chorus algorithm.

Tri Rate

Adjusts the rate at which a triangular wave will be used for modulation in the Wave Chorus algorithm.

Tri Depth

Adjusts the depth at which a triangular wave will be used for modulation in the Wave Chorus algorithm.

Sin Rate (Sine Rate)

Adjusts the rate at which a sine wave will be used for modulation in the Wave Chorus aigorithm.

Sin Depth (Sine Depth)

Adjusts the depth to which a sine wave will be used for modulation in the Wave Chorus algorithm.

Exp Rate (Exponential Rate)

Adjusts the rate at which an exponential curve will be used for modulation in the Wave Chorus algorithm.

Exp Depth (Exponential Depth)

Adjusts the depth to which an exponential curve will be used for modulation in the Wave Chorus algorithm.

**** With the Wave Chorus algorithm, the various settings for depth for tri, sine, and exponential determine the LFO level. The chorus which is actually applied will use a waveform which reflects a mixture of these factors.***

Tri: Provides a chorus with a minimum of undulations. (Standard chorus uses Tri.)
Sin: Provides a chorus with a greater number of undulations than Tri.
Exp: Provides a flanger-like chorus.

Bass

Adjusts the tone of the lower range of the chorus sound.

Low Pass Filter

Adjusts the frequency at which the low pass filter begins to work. When set to Thru, the low pass filter is inactive.

Direct Level

Adjusts the volume of the direct sound.

Effect Level

Adjusts the volume of the chorus sound.

Pitch Shifter

This effect alters the pitch of the original sound. The SE-70 can raise or lower the pitch by 2 octaves.

Stereo Link

When Stereo Link is turned ON in the Stereo Pitch Shift algorithm, and a setting is made for the L channel, the pitch shifting for both the L & R channels will be synchronized, while the localization of the stereo field will be preserved. In this case, the R channel settings will be ignored.

Voice

Select the number of sounds that are to be produced.

**** When the number of voices becomes excessive, distortion could be produced. Should this occur, you will need to adjust the Master Level.***

Pitch Shifter 1, 2, 3... Mode, Mode

Selects the pitch shifter mode for each voice.

**** The contents of the modes are as follows:***

1, 2, 3, 4... As the mode number increases, the response gradually becomes slower (but there will be fewer fluctuations in the sound).

Inverse: Provides reverse sound.

Inverse 1: Response is fast; reverse time is short.

Inverse 2: Response is slow; reverse time is long.

**** If you want to change the pitch drastically, set the Mode to "3," "4" or higher.***

Pitch Shifter 1, 2, 3... Pitch, Pitch

Adjusts the amount of pitch change (in semitone units) for each voice .

Pitch Shifter 1, 2, 3... Fine, Fine

Provides for the fine adjustment of pitch change for each voice.

**** 100 for "fine" corresponds to "1" for pitch.***

Pitch Shifter 1, 2, 3... Pre Delay, Pre Delay
Adjusts the time interval between the start of the direct sound and when the pitch shift sound of each line is produced. Ordinarily set at "0 ms."

Pitch Shifter 1 Feedback, Feedback
Adjusts the amount of pitch shift sound that is to be fed back into the effect input.
**** Only pitch 1 is fed back and mixed with the input signal.***

Pitch Shifter 1, 2, 3... Pan
Adjusts the localization of the sound image for each pitch shifted sound.

Pitch Shifter 1, 2, 3... Level
Adjusts the volume of each pitch shifted sound.

Bass
Adjusts the tone of the lower range of the pitch shifted sound.

Treble
Adjusts the tone of the upper range of the pitch shifted sound.

Effect Level
Adjusts the overall volume of the pitch shifted sound.

Direct Delay
Adjusted when you wish output of the direct sound to be matched with the delay of the effect sound.

Direct Pan
Adjusts the localization of the sound image of the direct sound.

Direct Level
Adjusts the volume of the direct sound.

**** Stereo Pitch Shift provides a parameter that allows for independent settings for the left and right channels. L and R are added to such parameters.***

L: Left
R: Right

Phaser

Produces a 'phased' effect that adds more dimension to the sound by adding phase–shifted signals to the original.

Mode

Allows you to select the type of phase effect to be applied.
4 stage: Phaser using 4-stage phase shift circuitry.
8 stage: Phaser using 8-stage phase shift circuitry.
Bi-Phase: Phaser that links two phase shift circuits in series.

* ***The order in which the stages occur in the Stereo Phaser are as follows. Those with the least number of taps (stages) come first, with the others (those having increasingly larger numbers of taps) occurring afterwards. Next, come those for Bi–Phase, also ordered so those with the least number of taps come first.***

Rate

Adjusts the rate at which the phase effect is applied.

Depth

Adjusts the depth to which the phase effect is applied.

Manual

Adjusts the center frequency around which the effect will be applied.

Resonance

Adjusts the amount of resonance. The higher the value, the more unique the sound becomes.

* ***If resonance is increased too much, distortion could be produced. Should this occur, you will need to adjust the Master Level until you eliminate the distortion. Additionally, if resonance is increased when there are numerous taps, oscillation could be produced.***

Separation

Adjusts the amount of diffusion for the sound. When you raise the value, the diffusion is increased.

Step

Turns 'stepped' processing On/Off. When ON, the phase effect provides step–like transitions.

Step Rate

Adjusts the time interval for the stepped transitions in rate and depth. The higher the value, the smaller the steps become.

Bass

Adjusts the tone of the lower range phaser sound.

Treble

Adjusts the tone of the upper range phaser sound.

Effect Level

Adjusts the volume of the phaser sound.

Flanger

This effect provides a sound which is similar to that produced by jet planes when ascending and descending.

Rate
Adjusts the rate that the flanger uses for modulation.

Depth
Adjusts the depth that the flanger uses for modulation.

Manual
Adjusts the center frequency for the flanging effect.

Resonance
Adjusts the amount of resonance for the flanger. The higher the value, the more unusual the sound.
**** If resonance is increased too much, oscillation could be produced.***

Separation
Adjusts the diffusion. The diffusion increases as the value increases.

Step Mode
Selection for the type of flanging effect to be applied.
Off: Standard flanger. Step and gate are inactive.
Step: Alterations in the flanging effect (pitch changes) are applied in steps.
Gate1: Output is periodically switched On/Off
Gate2: Output is periodically panned to extremes.
Gate3: Output is periodically panned smoothly.

Step Rate
Adjusts the rate of the selected mode.
The higher the value, the finer the steps become when "Step" has been selected at Step Mode.
In the case of Gate1, 2, or 3 the rate is made faster.

Bass
Adjusts the tone of the lower range for the flanger sound.

Treble
Adjusts the tone of the upper range for the flanger sound.

Effect Level
Adjusts the volume of the flanged sound.

Effects Contained In Multi-Type Algorithms

Ring Modulator

Produces a bell-like sound by applying amplitude modulation (AM) to the input signals.

Modulation f (Modulation Frequency)
Determines the frequency used for the modulation.

Direct Level
Adjusts the volume of the direct sound.

Effect Level
Adjusts the volume of the effect sound.

Noise Suppressor

Cuts only the noise during otherwise silent periods (without affecting the original sound).

Threshold
Adjusts the level at which the noise suppressor begins to work. Signals below the level that has been set are muted.

Release
Adjusts the time it will take from the moment the noise suppressor begins to work until the volume reaches "0."

Level
Adjusts the volume the sound is to have after passing through the noise suppressor when it is inactive.

Overdrive/Distortion

Adds distortion to the sound.

Mode
Selects the type of distortion. When an overdrive type effect is selected, the sound will be like that generated by a distorting tube amplifier. A distortion type effect will produce an even more powerful distortion.
(Guitar Multi 1/2/3/4, Guitar Synth)

Natural Overdrive	: A natural distortion simulating an over-driven vacuum tube amplifier.
Vintage Overdrive	: Distortion from the renowned BOSS OD-1 compact effects unit.
Turbo Overdrive	: A full-bodied distortion combined with the subtle nuances typical of overdrive.
Crunch	: A light distortion.
Distortion	: Provides a standard distortion sound.
Metal 1	: A distortion geared for metal sounds.
Metal 2	: A distortion for metal sounds with a distinctively unique touch added to the middle range.

(Bass Multi, Bass Synth, Rotary)

Overdrive	: A standard overdrive sound.
Distortion	: A standard distortion.
Metal	: A metal sound distortion for bass.

Gain

Selection for the degree of distortion (High/Low). When a hard distortion is necessary, select High.

Drive

Adjusts the amount of distortion.

Tone

Adjusts the tone.

Direct Level

Adjusts the volume of the direct sound.

Level, Effect Level

Adjusts the volume of the effect sound.

Rotary

Simulates rotary speakers. The unique effect is produced by the fluctuations that occur when two speakers (Low/High) are rotated.

Speed

Provides selection for the speed (Fast/Slow) at which the sound undulates.

Low Rate Fast

When Fast is selected for Speed, it adjusts the rate of the lower range.

Low Rate Slow

When Slow is selected for Speed, it adjusts the rate of the lower range.

Low Rise Time

Allows you to set the time it will take for the lower range's revolution speed to reach Fast when switching Speed from Slow to Fast.

Low Fall Time

Allows you to set the time it will take for the lower range's revolution speed to reach Slow when switching Speed from Fast to Slow.

Low Level

Adjusts the volume of the lower range.

High Rate Fast
When Fast is selected for Speed, it adjusts the rate of the upper range.

High Rate Slow
When Slow is selected for Speed, it adjusts the rate of the upper range.

High Rise Time
Allows you to set the time it will take for the upper range's revolution speed to reach Fast when switching Speed from Slow to Fast.

High Fall Time
Allows you to set the time it will take for the upper range's revolution speed to reach Slow when switching Speed from Fast to Slow.

High Level
Adjusts the volume of the upper range.

Separation
Adjusts the amount of diffusion for the sound. When you raise the value, the diffusion is increased.

Enhancer

By adding sounds which are out-of–phase with the direct sound, this effect enhances the definition of the sound, and pushes it to the forefront.

Sens
Adjusts the manner in which the enhancer will be applied relative to the input signals.

Frequency
Sets the frequency at which the enhancer effect will begin to be applied. The effect will be made apparent in the frequencies above the frequency set here.

Mix Level
Adjusts the amount of phase-shifted sound of the range set by "Frequency" that is to be mixed with the input.

Low Mix Level
Adjusts the amount of phase-shifted sound of the lower range that is to be mixed with the input.

Level
Adjusts the volume of the enhanced sound.

Panning/Tremolo

When the input is in stereo, panning can cause sound to 'fly' right and left automatically. Tremolo allows you to obtain periodic changes in the volume.

Mode

Offers selection for panning or tremolo.

Modulation Wave

The manner in which the effect is applied is selected by choosing a waveform.
Tri: Provides smooth transitions.
Square: Provides abrupt changes.

Rate

Adjusts the rate at which the effect is applied.

Depth

Adjusts the depth to which the effect will be applied.

Balance

With panning, it adjusts the span over which the sound shifts left and right.
In the case of tremolo, it adjusts the localization of the sound.

Slow Gear

This effect makes it possible to automatically obtain a 'volume swell' technique. The volume of the attack portion of the input signal is lowered, then raised gradually.

Mode

Selection for Auto or Manual. When Auto is selected, slow gear will be applied continuously. When set to Manual, it can be turned On/Off using an external switch.

Sens

Adjusts the manner Slow Gear is to be applied. With Sens set to a low value, the effect will be applied only when the input level is quite high. With higher values, the effect will be applied to low-level input signals.

Attack

Adjusts the attack of the sound.

Trigger

When the Manual mode is selected, Slow Gear can be switched On/Off using an external switch.

**** This parameter is used to carry out real-time parameter control.***

Compressor/Limiter

The Compressor attenuates high input signals and boosts low input signals. This ensures a signal of reduced dynamic range.
The Limiter sets a 'limit' on high–level input signals in order to prevent distortion.

Mode
Selection for Compressor or Limiter.

Sustain
When the Compressor is selected, this adjustment controls the amount of time over which low-level signals will be boosted and kept at a predetermined volume level.

Attack
When the Compressor is selected, this setting adjusts the strength of the attack when signals are input.

Threshold
When the Limiter is selected, this setting adjusts the level at which the effect will be made apparent. When a signal greater than the level set here is input, it is attenuated.

Release
When the Limiter is selected, this adjustment controls the amount of time it takes for the effect to disengage after the signal has dropped below the threshold level.

Ratio
Selects the extent to which the signal will be compressed (compression ratio) while the Limiter is working.

Tone
Adjusts the tone.

Level
Adjusts the volume.

Auto Wah

This effect produces its unique sound (Wah) by applying time-based changes to the frequency response of the filter. Auto Wah allows for cyclic changes to be applied to the filter, or for the alterations to be applied in correlation with changes in the volume level of the input in order to obtain the Wah effect automatically. In addition, pedal control can be obtained for Wah by using an expression pedal for real–time control over parameters.

Mode

Selection for BPF (Band Pass Filter) or Low Pass Filter. BPF provides the Wah effect over a narrow frequency range, whereas LPF provides it for a broad frequency range.

Polarity

When alterations are to be applied to the filter to correspond with changes in the input, this allows you to have the filter shift toward the upper frequencies (Up) or toward the lower frequencies (Down).

Sens

Adjusts the sensitivity with respect to the input which will prevail over filter alterations. The response is increased with higher values, while at '0' no effect will be obtained.

**** This value should be set to '0' when using a pedal for the Wah effect.***

Manual

Adjusts the base frequency (frequency at which the effect begins to work) for the Wah effect.

**** Make this parameter the target when using a pedal for the Wah effect.***
Refer to "Real–time Control Over Parameters" (see the Owner's Manual P.32).

Peak

Adjusts the manner in which the Wah effect will work with respect to the base frequency. With lower values, the Wah effect will be obtained though a wider range in the vicinity of the base frequency. With higher values, there will be a narrower range around the base frequency in which the Wah effect will be obtained.

Rate

Adjusts the rate at which Wah will be modulated automatically.

Depth

Adjusts the depth at which Wah will be modulated automatically. At '0' there will be no automatic changes.

**** This value should be set to '0' when using a pedal for the Wah effect.***

Level

Adjusts the volume.

Guitar Amp Simulator

Simulates the response of a guitar amplifier. This effect allows you to obtain a more robust sound even when using line input.

Mode

Selects the mode for the guitar amplifier simulator.
Small: Simulates a small amplifier.
Built In: Simulates an integrated (amp + speaker) amplifier.
2Stack: Simulates a large-scale two–tiered amplifier.
3Stack: Simulates a large-scale 3–tiered amplifier.

Vibrato

Applies subtle undulations to the pitch of the direct sound.
**** This effect is designed to be turned On/Off using an external switch.***

Trigger

Switches Vibrato On/Off using an external switch.
**** This parameter is used to carry out real-time parameter control.***
Refer to "Real–time Control Over Parameters" (see the Owner's Manual P.32).

Rate

Adjusts the rate of the vibrato.

Depth

Adjusts the depth of the vibrato.

Rise Time

Adjusts the time interval from when the trigger is turned ON until the vibrato effect is applied.

Feedbacker

Allows a feedback effect to be easily obtained (without depending on an amplifier or other special settings).
**** This effect is designed to be turned On/Off using an external switch.***
To create feedback, input a single note. After the sound becomes stable, switch on the trigger.

- ***Connect the instrument (guitar, etc.) directly to the SE-70. Errors (such as feedback pitch) could be produced if the instrument signal has been routed through some other effects unit.***
- ***Errors can result when playing harmonics or chords, or when playing too softly, or also when the sound of an adjacent string has been mixed in.***
- ***Even during moments of silence, if the trigger is switched on, some sound could be produced. (This does not indicate an abnormality.)***

Trigger

Switches feedback On/Off using an external switch.

This parameter is used to carry out real-time parameter control.
Refer to "Real–time Control Over Parameters" (see the Owner's Manual P.32).

Rise Time

Adjusts the time interval from trigger On to when the feedback effect is applied.

Vibrato Rate

Adjusts the rate of vibrato when feedback is active.

Vibrato Depth

Adjusts the depth of vibrato when feedback is active.

Level

Adjusts the output volume for the feedbacker.

+1oct Level

Adjusts the volume of the sound one octave above the input sound. (Added when feedback is active.)

Bass Amp Simulator

Simulates the response of a bass amplifier. This effect allows you to obtain a more robust sound even when using line input.

Mode

Selects the mode for the bass amplifier simulator.
Small: Simulates a small amplifier.
Built In: Simulates an integrated (amp + speaker) amplifier.
Stack: Simulates a stacked, large-scale amplifier.

De-esser

Useful for reducing 'sibilant' or 'S' sounds produced by a vocalist.

Sens

Adjusts the sensitivity relative to the input volume, which controls how the effect is applied.

Frequency

Sets the frequency at which the de-esser effect will be applied. The effect will be made apparent in the frequencies above the frequency set here.

Other Effects

Equalizer (EQ), Pre Equalizer, Synth Equalizer

Used to adjust the tone. Parametric EQ is provided for the High-Mid, Mid, and Low–Mid frequency ranges.

Low EQ
Adjusts the tone of the Low range.

Low-Mid f (Low-Mid Frequency)
Sets the center frequency to be used for Low-Mid EQ adjustments.

Low-Mid Q
Adjusts the range covered by the EQ, centered on the frequency that was set for Low-Mid f. The greater the value, the narrower the Range becomes.

Low-Mid EQ
Adjusts the tone of the Low-Mid range.

Mid f (mid frequency)
Sets the center frequency to be used for Mid EQ adjustments.

Mid Q
Adjusts the range covered by the EQ, centered on the frequency that was set for Mid f. The greater the value, the narrower the Range becomes.

Mid EQ
Adjusts the tone of the Mid range.

High-Mid f (High Mid Frequency)
Sets the center frequency to be used for High-Mid EQ adjustments.

High-Mid Q
Adjusts the range covered by the EQ, centered on the frequency that was set for High-Mid f. The greater the value, the narrower the Range becomes.

High-Mid EQ
Adjusts the tone of High-Mid range.

High EQ
Adjusts the tone of the High range.

High Pass Filter
Adjusts the frequency at which the high pass filter begins to work. When set to Thru, the high pass filter is inactive.

Low Pass Filter
Adjusts the frequency at which the low pass filter begins to work. When set to Thru, the low pass filter is inactive.

Level
Adjusts the volume after it has passed through the equalizer.

Vocoder

After dividing the sound (from a synthesizer or other instrument) from the L input channel into the relative frequency bands, it is processed so it takes on a correlative relationship with the frequency content of the vocal sounds that have been input to the R channel using a microphone. As a result, vocals seem as if they were produced using the instrument's sound.

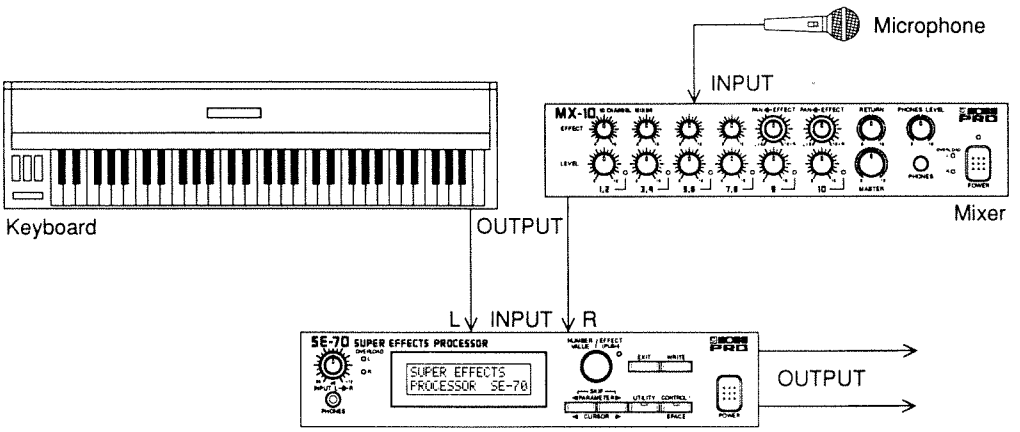

**** We recommend the microphone should be pre-amplified (by a mixer, etc.).***

Distortion
Selects whether distortion is to be On or Off.

Drive
Adjusts the degree to which distortion is to be applied.

Distortion Level
Adjusts the volume after passing through distortion.

Mic Limiter (Microphone Limiter)
Selects whether the microphone limiter is to be On or Off. When a signal greater than the level set for Threshold is input, the signal is attenuated.

Threshold
Adjusts the level at which the limiter will begin to operate.

Limiter Level
Adjusts the volume after passing through the limiter.

Mic EQ (Microphone EQ)
On/Off selection for Mic EQ.

Low EQ
Adjusts the tone of the lower range for the microphone sound.

Mid f (Mid Frequency)
Sets the center frequency to be used for Mid EQ adjustments.

Mid Q
Adjusts the range covered by the EQ, centered on the frequency that was set for Mid f. The greater the value, the narrower the range becomes.

Mid EQ
Adjusts the tone of the mid range for the microphone sound.

High EQ
Adjusts the tone of the upper range for the microphone sound.

EQ Level
Adjusts the volume after passing through microphone EQ.

Mode
Selection for Sharp or Soft. When set to Sharp, the human voice is emphasized. When set to Soft, musical instrument sounds are emphasized.

Sens
Adjusts the input sensitivity of the microphone. The greater the value, the greater the sensitivity.

Voice Character 1, 2, 3...
Allow for adjustment of the volume for each frequency band. These adjustments allow the tone of the vocoder to be determined.

Gate Threshold
Adjusts the level at which the noise gate will begin to be applied to the microphone input. Whenever the input signal from the microphone falls below the set level, the signal is muted.

Mic HPF (Microphone HPF)
Sets the frequency at which the High Pass Filter (HPF) applied to the microphone input during Mic Mix will begin to be applied. When set to a high value, only the consonants will be included in the mix. When set to Thru, the HPF is inactive.

Mic Mix
Adjusts the amount of microphone signal (R channel input) to be added to the vocoder output.

Noise Suppressor Threshold
Adjusts the level at which the noise suppressor will begin to be applied to the musical instrument input (L channel).

Vocoder Level
Adjusts the volume of the vocoder.

Guitar Synth, Bass Synth

Applies extremely rapid pitch conversions to the electric guitar or bass signals input to the L channel and produces a synthesizer sound.

In order to obtain the correct pitches while playing, you will need to make the settings properly and play in an appropriate manner.

Since this algorithm is designed for use with electric guitars and electric basses, unexpected results could occur if you connect other kinds of instruments.

Guitar Synth: For use with electric guitar only.
Bass Synth: For use with electric bass only (4 string bass).

Important

Set the Input Level and Sens to appropriate values.
Play only single notes, muting the previous one before playing the next.
Connect the guitar or bass directly to the SE-70.

**** Errors could be produced when playing harmonics or chords, or when an adjacent string has inadvertently been played. If the Input Level and Sens have not been set appropriately, sound might not be produced, or errors in the timing of notes could occur.***
**** The pitch of the Main OSC and Tuner are identical.***

Sens

Adjusts the sensitivity with respect to the input. While viewing the Sens Level Meter, adjust it so the meter's fluctuation remains within the "T" range for the minimum and maximum input.

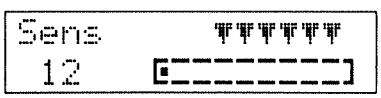

Chromatic

Selects whether the Chromatic function is to be On or Off. When On, the pitch changes in the synthesizer sound will occur in semitone steps. It will not respond to bending and vibrato pitch changes since these intervals are smaller than a semitone. Convenient for reproducing instruments with fixed pitch increments (the semitone steps of a piano, for example).

Wave

Selects whether Square or Saw is to be used as the waveform (OSC).

Oct Shift

The output can be shifted relative to the input signals by +1, 0, -1, or -2 octaves.

Sub OSC Pitch

Adjusts the pitch of the sub oscillator. Subtle undulations and fatness can be added by shifting the pitch relative to the main oscillator.

Main OSC Level
Adjusts the volume of the main oscillator.

Sub OSC Level
Adjusts the volume of the sub oscillator.

-1oct Mix
Adjusts the amount of synth sound (main + sub oscillator) one octave below the original sound that is to be mixed in.

Portamento
Selects whether Portamento is to be On or Off. When On, a smooth transition in the pitch is made between one note and the next.

Portamento Time
Adjusts the portamento speed.

Vibrato Rate
Adjusts the speed of the vibrato.

Vibrato Depth
Adjusts the depth of the vibrato.

TVF Cutoff f (TVF Cutoff Frequency)
Adjusts the frequency at which the TVF begins to work.

TVF Resonance
Adjusts the resonance of the TVF. With increased values for the setting, frequencies in the vicinity of the cut off frequency are emphasized.

TVF Depth
Adjusts the TVF depth. The higher the value for the setting, the more pronounced the filter's effect. Plus and minus determine the filter's polarity.

TVF Sens
Adjusts the sensitivity of the filter relative to the level of the input. When the value is at '0' the TVF envelope* will remain fixed, regardless of the strength used when playing. When the sensitivity is raised, the filter's effect will become more pronounced when playing strength increases.

TVF Attack
TVF Decay
TVF Sustain
TVF Release
Time-based alterations can be applied to the tone using the four parameters above.

**** TVF (Time Variant Filter): In order to control a tone, this filter alters the way it produces its effect over time. The TVF envelope (manner change takes place) is illustrated below.***

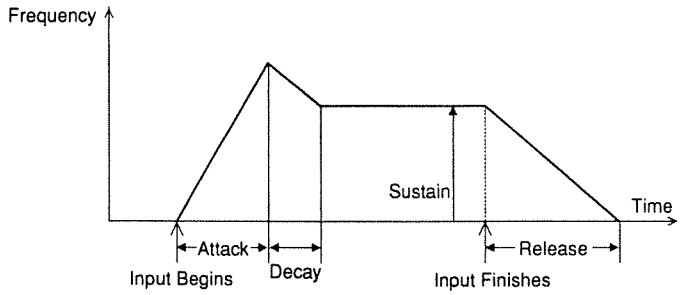

Depending on the value for the TVF depth, the TVF envelope will be changed as shown below.

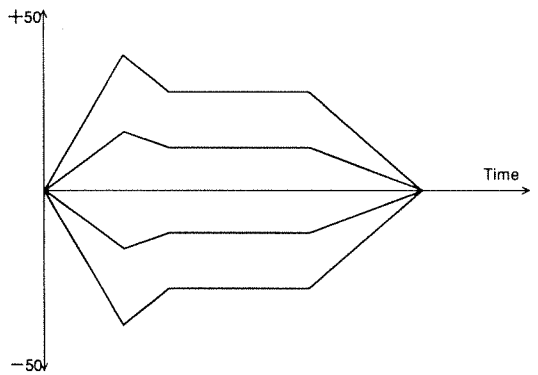

TVA Sens

Adjusts the sensitivity that will apply to the changes that are made in the synth volume relative to the level of the input. When the value is at "0" the TVA envelope* will remain fixed, regardless of the strength used when playing. When the sensitivity is raised, the filter's effect will become more pronounced when playing strength increases.

TVA Attack
TVA Decay
TVA Sustain
TVA Release

Time-based alterations in the volume can be applied using the four parameters above.

**** TVA (Time Variant Amplifier): A device that produces time-based alterations in the volume. The TVA envelope (manner change takes place) is illustrated below.***

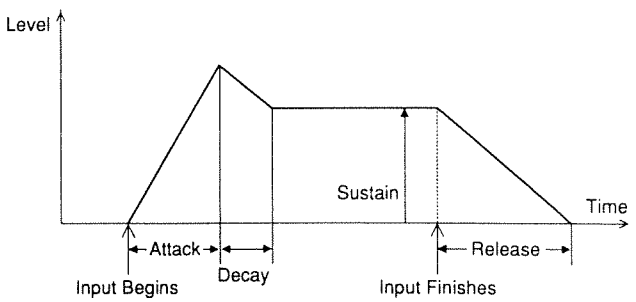

Hold

While on, sounds can be sustained.

**** This parameter is used to carry out real–time parameter control.***

Synth Mixer

Synth Pan
Adjusts the localization of the sound image for the synthesizer.

Synth Level
Adjusts the volume of the synthesizer.

Guitar Pan, Bass Pan
Adjusts the localization of the sound image for a guitar or bass.

Guitar Level, Bass Level
Adjusts the volume of a guitar or bass.

Mixer

Noise Suppressor Threshold
Adjusts the level at which the noise suppressor begins to work. Whenever the signals fall below the set level, they are muted.

Noise Suppressor Release
Adjusts the time it will take from the moment the noise suppressor begins to work until the volume reaches "0."

Reverb Level
Adjusts the volume that is passed on to reverb.

Delay Level
Adjusts the volume that is passed on to delay.

Chorus Level
Adjusts the volume that is passed on to chorus.

Pan, Ch 1 Pan, Ch 2 Pan
Adjusts the localization of the sound image.

Level, Ch 1 Level, Ch 2 Level
Adjusts the volume.

Hum Canceler

Used to cancel hum noise.

Threshold
Adjusts the level at which the hum canceler begins to work. Signals below the level that has been set will have any hum noise removed.

Frequency
Sets the frequencies that are to be canceled.

Vocal Canceler

Allows you to remove vocals localized in the center of the field from stereo music sources that you input.

NOTE

With certain music sources you may not obtain the result you desire, since sounds other than those you intend to erase could be erased as well. Do not expect this feature to provide a satisfactory result if the source material has a lot of reverb, or the sound you intend to erase is not located in the center of the stereo field.

Balance

When the sound you intend to erase is not located in the center, this control allows you to find the point at which most of the vocal content can be removed.

Key Changer

Allows you to change the pitch of sound sources that are input.

Mode

Provides selection for the key changer mode.

1, 2, 3, 4: The response becomes slower as you move from 1 to 4, but the fluctuations become fewer.

Key

Adjusts the amount of change in pitch, in semitone units.

Fine

Provides for the fine adjustment of the amount of change in pitch.

**** "100" for Fine corresponds to "1" for Key.***

Sampler 1, Sampler 2

Sound which has previously been recorded (sampled) by the unit can be played back using an external switch or MIDI messages. The SE-70 is equipped with two types of samplers capable of recording up to 2,000 milliseconds of sound. Sampler 1 is designed for normal playback, while Sampler 2 performs reverse playback.

In using the samplers, the following steps are involved:

1) Preparation
2) Recording
3) Playback

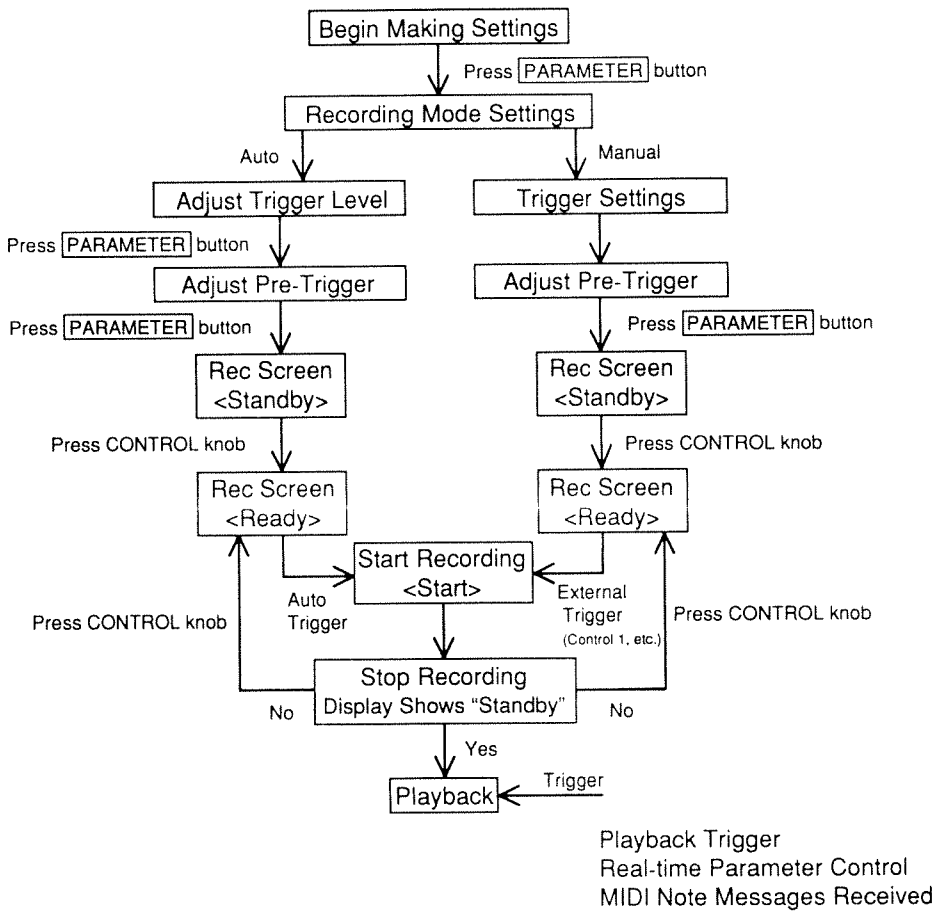

1) Preparation

Recording Mode

Auto: Upon sensing an input signal, the unit begins recording automatically.
Manual: In this mode, an external switch is used to begin recording.

With the factory defaults, Manual mode recording operations are set so they are under the control of the Control 1 button. Should you wish to use a control other than the Control 1 button, use the real-time parameter control feature to assign recording to an external switch or other controller.

Ex. Assigning to Control 2

To be able to use an external switch (FS-5U; connected to the Control 2 jack) to begin recording, make the following settings:

Utility	: Control 2 Select	: Assignable
Parameter	: Assign 1 Target	: Trigger
	Assign 1 Min	: Off
	Assign 1 Max	: On
	Assign 1 Source	: Control 2
	Assign 1 Mode	: FS-5U Momentary

**** See "Real–Time Control Over Parameters" (see the Owner's Manual P.32).***

**** MIDI can also be used for this operation. Refer to "MIDI Control" (see the Owner's Manual P.42).***

**** Use an (optional) FS-5U foot switch to trigger the sampler. The Assign Mode setting for real–time parameter control should be set to FS-5U Momentary.***

Trigger Level

Recording will start when the input level exceeds the trigger level. While playing your instrument and viewing the meter, adjust the CONTROL knob until you have it set so the trigger will function at the appropriate level.

This adjustment needs to be made only when Auto has been selected as the recording mode. (With Manual there is no Trigger level adjustment.)

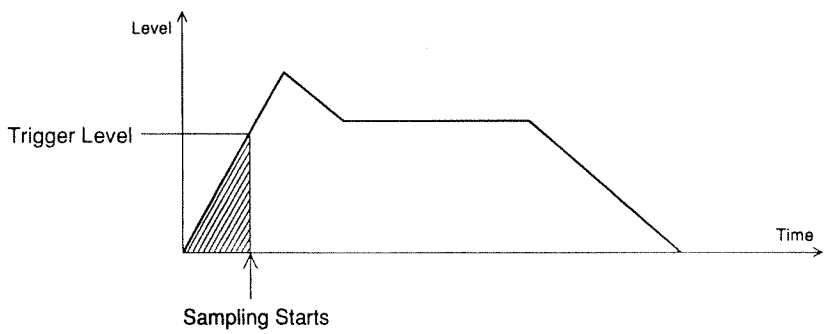

**** Use Pre-Trigger for recording the portion indicated with slanted lines.***

Pre-Trigger

Adjusts the pre trigger. By using the pre-trigger, you will be able to also record the data that occurs before the moment the trigger is engaged. This conveniently allows you to avoid losing the important beginning portions of sounds which may have a gently rising, relatively long attack.

**** This feature is effective for both the Auto and Manual recording modes.***

2) Recording

Select the recording screen (the first screen for the parameter) and carry out the recording.

Auto Recording

This screen appears only when Auto has been selected as the recording mode.

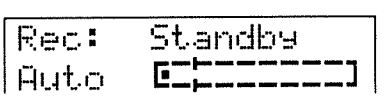

Push the CONTROL knob and confirm that the unit displays "Ready" instead of "Standby". It is now ready for recording.

```
Rec:   Ready
Auto   [-------]
```

From the "Ready" state, recording will begin automatically as soon as you play something on the instrument connected to the SE-70.

Manual Recording

This screen appears only when Manual has been selected as the recording mode.

```
Rec:   Standby
Manual [--------]
```

Push the CONTROL knob and confirm that the unit displays "Ready" instead of "Standby". This means it is ready for recording.

```
Rec:   Ready
Manual [--------]
```

From this state, recording will begin when you operate the external switch or other assigned control.

The amount of time that has elapsed during recording is indicated in the display by the increasing number of asterisks that appear. (Applies to both Auto and Manual.)

Auto Recording

```
Rec:   Start**
Auto   [-----]
```

Manual Recording

```
Rec:   Start**
Manual [-----]
```

Once recording has been completed, "Standby" will automatically reappear in the display. Up to 2,000 ms of sound can be recorded. (Applies to both Auto and Manual.)

* ***To do the recording over again, press the CONTROL knob and start over from where the unit displays "Ready."***
* ***The SE-70 is not capable of storing the data it has recorded. All sampled data will be discarded as soon as the power is turned off.***

3) Playback

After recording (sampling) has been completed, and "Standby" appears in the display, you can play back what was recorded. Ordinarily, you should press EXIT to go to the Play screen where you can carry out playback. The playback time, pitch, and other factors can be altered using the parameters explained in the following.

* ***If you press the CONTROL knob while "Standby" appears in the display, the unit will switch to "Ready" (ready to begin recording), and what was already sampled will be discarded. Once you have entered "Ready" in this manner, you will not***

There are two ways in which playback can be carried out:

1. MIDI Note messages (keyboard messages) are received, causing the unit to play the sample at various pitches.
2. An external trigger (external switch) is used for control over playback at a predetermined pitch.

**** When using MIDI messages for playback, set the MIDI channel so it matches the channel used by the transmitting unit.***
Refer to "Settings for the MIDI Channel and Omni Mode" (see the Owner's Manual P.39).

**** In the case of 2, you need to assign the external switch to the Trigger parameter. (See "Recording Mode.") If using Manual recording, you use the same switch used for recording. This is because the same "Trigger" needs to be used for control of recording and playback. With the factory defaults, playback operations are set so they can be carried out under the control of the Control 1 button.***

The method of playback is set using the following parameters.

Pitch

Sets, in semitone units, the pitch used when an external trigger is used for playback.

Fine

Provides for the fine tuning of the pitch used when an external trigger is used for playback.

**** "100" for Fine corresponds to 1 for Pitch.***

Play Time

Adjusts the playback time.

**** This parameter sets the Playback Time and Recording Time simultaneously.***

Play Mode

Selects the playback mode.

Trigger : When it receives the trigger for playback (switch or MIDI messages), the unit carries out playback for the amount of time specified for Play Time.

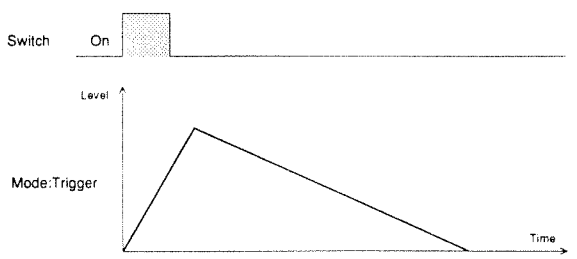

Gate : The unit carries out playback when the trigger is switched on. If the trigger is turned off part way through playback, then is turned on again, playback will start again from the beginning of the sample.

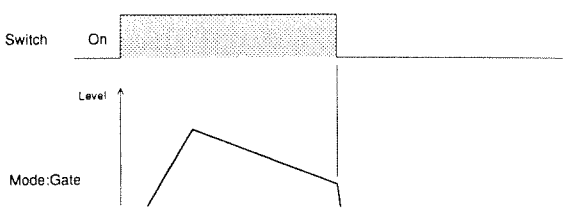

Attack
Adjusts the attack of the sound.

Decay
Adjusts the way in which the sound decays.

Original Key
This setting specifies the Key Number (location on a keyboard) that corresponds to the original pitch of the sampled sound. When set to "Off", MIDI Note messages will be ignored.

Master Level.
Adjusts the overall volume that will be output.

**** The settings you make will be discarded if you turn the power off, or press EXIT, and then switch to different Patch Number. After you have completed making your setting changes you must perform a "Write" if you wish to have them remain in memory. See "The Write Procedure" (see the Owner's Manual P.23).***

Repeat Play

This function is comprised of a sampler supplied with automatic playback capabilities. It easily allows you to sample in real-time while performing, then obtain automatic, repetitive playback. Possible settings can accommodate reverse playback and very long interval playback (up to a max. of 20 seconds). A maximum of 2,000 ms of material can be sampled.

Repeat Play differs from Sampler 1 and Sampler 2 in that it can carry out playback automatically once the recording has been made. By making the settings for the type of playback desired, you can have playback start the moment the recording finishes.

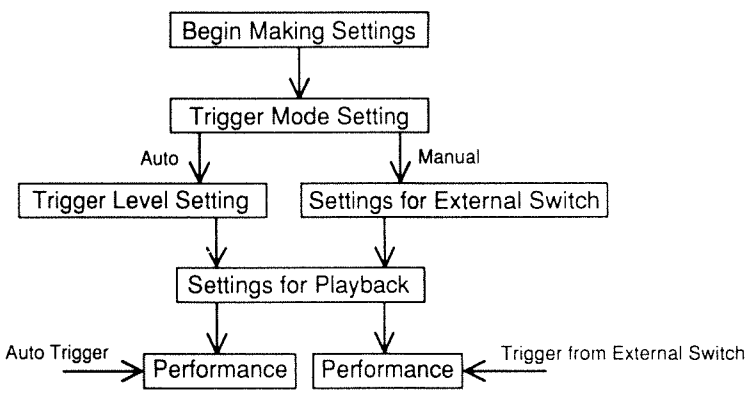

**** The PARAMETER button is pressed for each of the settings.***

Instructions are provided in the following order:
1) Settings for the trigger (signal for starting Repeat Play).
2) Settings for the various types of playback.

1) Settings for the Trigger

Trigger Mode

There are two ways in which this feature can be controlled:
Auto: Upon sensing an input signal, the unit begins recording/playback automatically.
Manual: In this mode, an external switch is used for control, allowing recording to be started whenever desired.

With the factory defaults, Manual mode trigger operations are set so they are under the control of Control 1. Should you wish to use a control other than Control 1, use the real-time parameter control feature to assign recording to an external switch or another controller.

Ex. Assigning to MIDI control messages.
To be able to use MIDI Control Change #46 as the trigger signal (Example: An FS-5U connected to CTL1 on the FC-50), set the following:

Parameters:

Assign 1 Target	: Trigger
Assign 1 Min	: Off
Assign 1 Max	: On
Assign 1 Source	: MIDI CC# 46
Assign 1 Mode	: FS-5U Momentary

**** Refer to "Real–time Control Over Parameters" (see the Owner's Manual P.32).***
**** Refer to "MIDI Control" (see the Owner's Manual P.42).***
**** Use an (optional) FS-5U to trigger the recording. The Assign Mode setting for real–time parameter control should be set to FS–5U Momentary.***

Trigger Level

Recording will start when the input level exceeds the trigger level. While playing your instrument and viewing the meter, adjust the CONTROL knob until you have it set so the trigger will function at the appropriate level.
This adjustment can be made only when Auto has been selected as the recording mode.

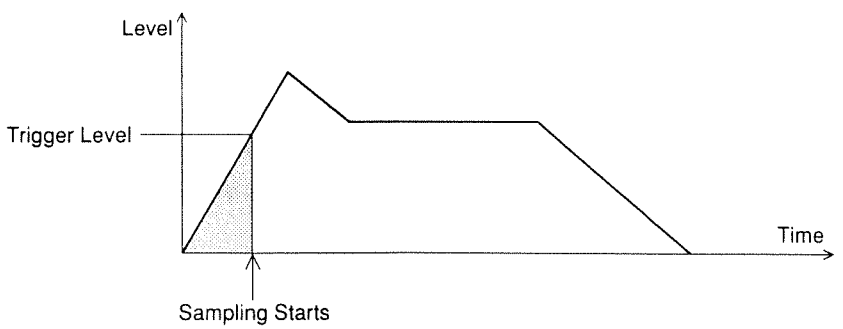

**** The screen at this time also serves as a monitor. See "3) Playback."***
**** In order to achieve the optimum trigger level, it is a good idea to set the Repeat Count to around 2 to 4, then make the adjustments while monitoring the sample***

2) Settings for the Various Types of Playback.

Reverse Play

On/Off selection for reverse playback. Reverse playback is obtained when ON.

Play Time

Sets the playback time. Adjusted when Auto has been selected as the trigger mode.

**** This parameter sets the Playback Time and Recording Time simultaneously.***

Interval

Adjusts the interval between repetitions of the playback.

Repeat Count

Selects the number of times playback is to be repeated.

Attack

Adjusts the attack of the sound.

Decay

Adjusts the degree of attenuation for the sound.

Bass

Adjusts the tone of the lower range of the repeated sound.

Treble

Adjusts the tone of the upper range of the repeated sound.

Direct Level

Adjusts the volume of the direct sound.

Effect Level

Adjusts the volume of the repeated sound.

Master Level

Adjusts the volume of the output.

**** The settings you make will be discarded if you turn the power off, or press EXIT, and then Switch to different Patch Number. After you have completed making your setting changes you must perform a "Write" if you wish to have them remain in memory. See "The Write Procedure" (see Owner's Manual P.23).***

3) Playback

The manner in which playback takes place will depend on the Trigger Mode:

Auto: No further sampling can be carried out until the number of repetitions specified for Repeat Count have been completed.

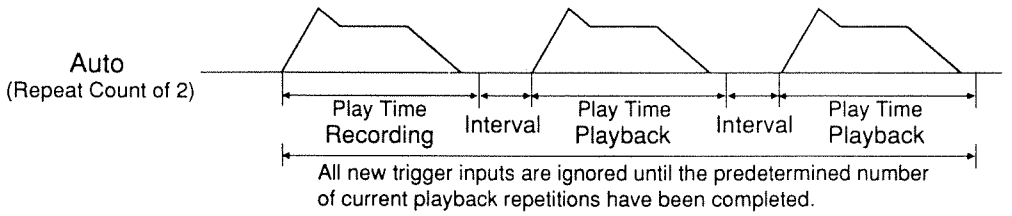

Manual: New samples can be made by operating the trigger, even while the unit is still progressing with the playback of the repetitions specified for Repeat Count. Any sampling time can be obtained simply by switching on the external switch for the length desired (up to a maximum of 2,000 ms).

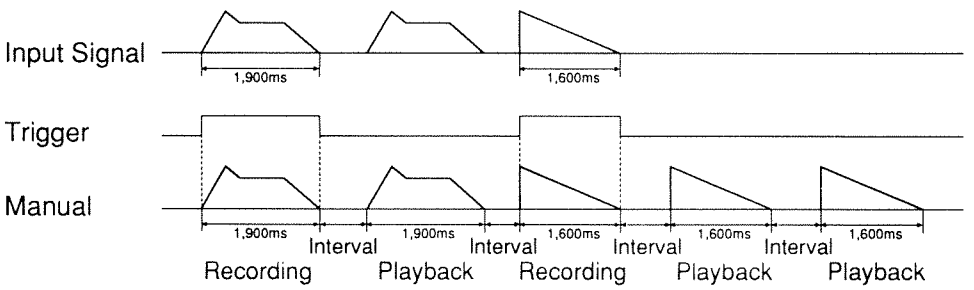

**** When " ∞" is selected for Repeat Count, you need to turn the effect off in order to stop playback.***

Once the settings have been completed, you can return to the Play screen.

Monitor

The Monitor screen (the first screen for parameters) can be selected to allow you to monitor the status while sampling.

Auto Recording

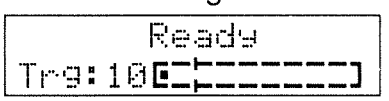

Manual Recording

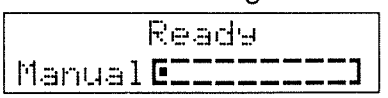

The amount of time that has elapsed since sampling began is indicated in the display by the increasing number of asterisks that appear.

Auto Recording

```
        Start**
Trg: 10[■■■■■____]
```

Manual Recording

```
        Start**
Manual [■■■■■____]
```

When sampling comes to an end, "Ready" will once again appear in the display.

** With the factory defaults, Manual mode trigger operations are set so they are under the control of Control 1.*

** Use an (optional) FS-5U foot switch as the trigger. The Assign Mode setting for real-time parameter control should be set to FS-5U Momentary.*

Direct

Level

Adjusts the volume of the direct sound.

** Certain algorithms allow settings to be made independently for the left and right channels. The letters L and R appear for such parameters.*

Master

Level

Adjusts the overall volume that is output by the SE-70.

Output Mode

Output Mode

Allows you to select the output mode.

Mono+Mono: All effects will be in monaural, and will be output on the relevant channel.

Stereo Mix: All effects will be preserved in stereo and mixed before being output.

Mono+Mono Mode

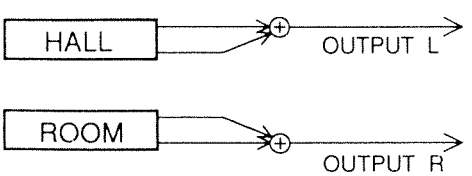

Stereo Mix Mode

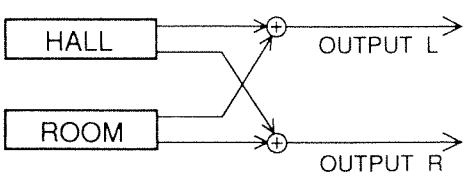

Algorithm List

Patch Number	Name displayed	Effect Name	Sampling Frequency(kHz)
101	Hall	Reverb+EQ	32
102	Room 1	Reverb+EQ	32
103	Room 2	Reverb+EQ	32
104	Plate	Reverb+EQ	32
105	St Reverb	Reverb+EQ	48
106	Gate Reverb	Gate Reverb+EQ	32
107	Ambience	Ambience+EQ	32
108	Simple Delay	Delay+EQ	48
109	Mono Delay	Delay+EQ	32
110	Mod Delay	Modulation Delay+EQ	32
111	Stereo Delay	Stereo Delay+EQ(L)+EQ(R)	32
112	20Tap Delay	20 Tap Delay+EQ	32
113	St Chorus	Stereo Chorus+EQ	48
114	Band Chorus	Stereo 2 Band Chorus+EQ	48
115	Wave Chorus	Chorus with 3LFOs+EQ	48
116	Super Chorus	Stereo 16 Stage Chorus+EQ	48
117	Pitch Shift	12 Voice Pitch Shifter+EQ	32
118	St P Shift	Stereo Pitch Shifter+EQ	48
119	St Phaser	Stereo 40 Stage Phaser+EQ	48
120	St Flanger	Stereo Flanger+EQ	48
121	Vocoder 1	10 Band Vocoder+EQ+DLY+CE+RV	32
122	Vocoder 2	21 Band Vocoder+CE+RV	32
123	Kb Multi	Ring Mod+EQ+NS+PS+PH+DLY+CE+RV	48
124	Rotary Multi	OD/DS+EQ+Rotary+NS+RV	32
125	Rhodes Multi	EQ+EH+NS+PH+DLY+CE+PN/TM+RV	48
126	Gt Multi 1	SG+CL+AW+OD/DS+EQ+EH+GAS+NS+PS+VB+PH+FL+DLY+CE+PN/TM+RV	32
127	Gt Multi 2	FB+CL+PS1+Pre EQ+OD/DS+EQ+GAS+NS+PS2+DLY+CE+RV	32
128	Gt Multi 3	CL+AW+OD/DS+EQ+GAS+NS+DLY+CE+RV	32
129	Gt Multi 4	CLEAN ch:CL+EQ+GAS+NS+DLY+CE+RV DRIVE ch:OD/DS+EQ+GAS+NS+DLY+CE+RV(PARALLEL)	32
130	Bass Multi	SG+CL+AW+OD/DS+EQ+EH+BAS+NS+PS+VB+PH+FL+DLY+CE+PN/TM+RV	32
131	Vocal Multi	LM+DE+EQ+EH+NS+PS+DLY+CE+RV	32
132	Guitar Synth	Guitar Synth+EQ +DLY+CE+RV CL+OD/DS+EQ+GAS+NS	32
133	Bass Synth	Bass Synth+EQ +DLY+CE+RV CL+OD/DS+EQ+BAS+NS	32
134	2ch Mixer	Lch: EQ+NS +DLY+CE+RV Rch: EQ+NS	48
135	Hum Canceler	Hum Canceler+NS	48
136	Vo Canceler	Vocal Canceler+EQ+Key Changer	48
137	Sampler 1	Sampler	32
138	Sampler 2	Sampler (REVERSE)	32
139	Repeat Play	Sampler with a Playing Timer	32
140	Hall+Room	Hall Reverb&Room Reverb (PARALLEL)	48
141	Rev+Delay	Reverb&Delay (PARALLEL)	48
142	Rev+Chorus	Reverb&Chorus (PARALLEL)	48
143	Rev+P Shift	Reverb&Pitch Shifter (PARALLEL)	48
144	Rev+Gate	Reverb&Gate Reverb (PARALLEL)	48
145	Delay+Chorus	Delay&Chorus (PARALLEL)	48

AW:Auto Wah
BAS:Bass Amp Simulator
CE:Chorus
CL:Compressor/Limiter
DE:De-esser
DLY:Delay
EH:Enhancer
EQ:Equalizer
FB:Feedbacker
FL:Flanger
Gate:Gate Reverb
GAS:Guitar Amp Simulator
Gt:Guitar
Kb:Keyboard
LM:Limiter
Mod:Modulation
NS:Noise Suppressor
OD/DS:Overdrive/Distortion
PH:Phaser
PN:Panning
PS:Pitch Shift
P Shift:Pitch Shift
RV:Reverb
SG:Slow Gear
St:Stereo
TM:Tremolo
VB:Vibrato
Vo:Vocal

On the SE-70, different sampling frequencies are used depending on the algorithm.

**** When the sampling frequency changes, the frequency response will change as follow:***

Preset Name Table < Standard >

No.	Preset Name	Algorithm
1	Kb Multi 1	Kb Multi
2	Kb Multi 2	Kb Multi
3	Kb Multi 3	Kb Multi
4	Kb Multi 4	Kb Multi
5	Ring Mod 1	Kb Multi
6	Ring Mod 2	Kb Multi
7	Synth Lead	Kb Multi
8	Rotary Fast	Rotary Multi
9	Rotary Slow	Rotary Multi
10	Rotary Drive	Rotary Multi
11	Rhodes 1	Rhodes Multi
12	Rhodes 2	Rhodes Multi
13	A.Piano	Rhodes Multi
14	Concert Hall	Hall
15	Large Hall	Hall
16	Dark Hall	Hall
17	Cathedral	Hall
18	Mid Room	Room 1
19	Live Room	Room 1
20	Dead Room	Room 2
21	Bright Room	Room 2
22	Large Room	Room 2
23	Rich Plate	Plate
24	Vocal Plate	Plate
25	St Mid Rev	St Reverb
26	St Room Rev	St Reverb
27	Vocal Echo	Rev+Delay
28	Analog Echo	Rev+Delay
29	Vocal Reverb	Hall+Room
30	Normal Gate	Gate Reverb
31	Reverse Gate	Gate Reverb
32	Panning Gate	Gate Reverb
33	Ambience 1	Ambience
34	Ambience 2	Ambience
35	Short Delay	Simple Delay
36	Medium Delay	Simple Delay
37	Long Delay	Mono Delay
38	Analog Delay	Mono Delay
39	Tape Echo	Mod Delay
40	Pan Delay	Stereo Delay
41	Tap Delay 1	20Tap Delay
42	Tap Delay 2	20Tap Delay
43	Light Chorus	St Chorus
44	Space-D	St Chorus
45	Analog CE	Band Chorus
46	2Band Chorus	Band Chorus
47	Ensemble	Wave Chorus
48	8stage CE	Super Chorus
49	16stage CE	Super Chorus
50	12voice PS	Pitch Shift

No.	Preset Name	Algorithm
51	Arpeggio	Pitch Shift
52	-oct Reverse	Pitch Shift
53	Diminish	Pitch Shift
54	St Detune	St P Shift
55	40stage PH	St Phaser
56	Bi-Phase 20	St Phaser
57	Vintage PH	St Phaser
58	Step Phaser	St Phaser
59	Flanger	St Flanger
60	Step Flanger	St Flanger
61	Gate Flanger	St Flanger
62	Pan Flanger	St Flanger
63	Vintage VC	Vocoder 1
64	Vocoder Gt	Vocoder 1
65	Vocoder 21	Vocoder 2
66	Double Voice	Vo Multi
67	Harmony	Vo Multi
68	Radio Voice	Vo Multi
69	Robot Voice	Vo Multi
70	Quiet!(60Hz)	Hum Canceler
71	Quiet!(50Hz)	Hum Canceler
72	Vo Canceler	Vo Canceler
73	Key Change+2	Vo Canceler
74	Key Change-2	Vo Canceler
75	Sampler	Sampler 1
76	Reverse SP	Sampler 2
77	Repeat Play	Repeat Play
78	Reverse Play	Repeat Play
79	2ch Mixer	2ch Mixer
80	Hall+Room	Hall+Room
81	Rev+Delay	Rev+Delay
82	Rev+Chorus	Rev+Chorus
83	Rev+P Shift	Rev+P Shift
84	Rev+Gate	Rev+Gate
85	Delay+Chorus	Delay+Chorus
86	Metal Drive	Gt Multi 1
87	Gt Lead 1	Gt Multi 1
88	Gt Cutting	Gt Multi 1
89	Cosmic Pan	Gt Multi 1
90	Gt Lead 2	Gt Multi 2
91	Gt Clean	Gt Multi 2
92	Octave Drive	Gt Multi 2
93	Delay Drive	Gt Multi 3
94	Clean+Dist	Gt Multi 4
95	Bass Solo	Bass Multi
96	Bass Drive	Bass Multi
97	Gt Synth 1	Guitar Synth
98	Gt Synth 2	Guitar Synth
99	Bass Synth 1	Bass Synth
100	Bass Synth 2	Bass Synth

Preset Name Table < Guitar >

< Mixer use >			< Guitar Amp use >		
No.	Preset Name	Algorithm	No.	Preset Name	Algorithm
1	Heavy Metal	Gt Multi 1	51	Heavy Metal	Gt Multi 1
2	Deep Chorus	Gt Multi 2	52	Deep Chorus	Gt Multi 2
3	Bell Guitar	Kb Multi	53	Bell Guitar	Kb Multi
4	Overdub Echo	Gt Multi 3	54	Overdub Echo	Gt Multi 3
5	5th Drive	Gt Multi 2	55	5th Drive	Gt Multi 2
6	Vintage OD-1	Gt Multi 1	56	Vintage OD-1	Gt Multi 1
7	Poundcake	Gt Multi 4	57	Poundcake	Gt Multi 4
8	Space Phase	Gt Multi 1	58	Space Phase	Gt Multi 1
9	Mellow Drive	Gt Multi 1	59	Mellow Drive	Gt Multi 1
10	Panning Wah	Gt Multi 1	60	Panning Wah	Gt Multi 1
11	Tube Stack	Gt Multi 2	61	Tube Stack	Gt Multi 2
12	Vibrato Gt	Gt Multi 1	62	Vibrato Gt	Gt Multi 1
13	Reverse PS	Gt Multi 2	63	Reverse PS	Gt Multi 2
14	Fuzz	Gt Multi 1	64	Fuzz	Gt Multi 1
15	Gt Synth?	Gt Multi 1	65	Gt Synth?	Gt Multi 1
16	'70s Rock	Gt Multi 2	66	'70s Rock	Gt Multi 2
17	Tube Crunch	Gt Multi 1	67	Tube Crunch	Gt Multi 1
18	Sitar	Gt Multi 1	68	Sitar	Gt Multi 1
19	Metal Flange	Gt Multi 1	69	Metal Flange	Gt Multi 1
20	Beat Delay	Gt Multi 1	70	Beat Delay	Gt Multi 1
21	Octave Drive	Gt Multi 2	71	Octave Drive	Gt Multi 2
22	Mellow Tone	Gt Multi 1	72	Mellow Tone	Gt Multi 1
23	Cry Cat	Gt Multi 1	73	Cry Cat	Gt Multi 1
24	Chorus Drive	Gt Multi 1	74	Chorus Drive	Gt Multi 1
25	Gate Drive	Gt Multi 1	75	Gate Drive	Gt Multi 1
26	'70s Fusion	Gt Multi 1	76	'70s Fusion	Gt Multi 1
27	Rockabilly	Gt Multi 2	77	Rockabilly	Gt Multi 2
28	Slow Attack	Gt Multi 1	78	Slow Attack	Gt Multi 1
29	Jazz Tone	Gt Multi 1	79	Jazz Tone	Gt Multi 1
30	'60s Tremolo	Gt Multi 1	80	'60s Tremolo	Gt Multi 1
31	Stereo Drive	Gt Multi 3	81	Stereo Drive	Gt Multi 3
32	Cutting	Gt Multi 1	82	Cutting	Gt Multi 1
33	Rotary EXP	Rotary Multi	83	Rotary EXP	Rotary Multi
34	Arming EXP	Gt Multi 2	84	Arming EXP	Gt Multi 2
35	CH1<—>CH2 EXP	Gt Multi 4	85	CH1<—>CH2 EXP	Gt Multi 4
36	Wah Dist EXP	Gt Multi 1	86	Wah Dist EXP	Gt Multi 1
37	Feedback EXP	Gt Multi 2	87	Feedback EXP	Gt Multi 2
38	Funk Wah EXP	Gt Multi 1	88	Funk Wah EXP	Gt Multi 1
39	E.Acoustic 1	Gt Multi 1	89	E.Acoustic 1	Gt Multi 1
40	E.Acoustic 2	Gt Multi 1	90	E.Acoustic 2	Gt Multi 1
41	Synth Horn	Guitar Synth	91	Synth Horn	Guitar Synth
42	Synth Lead	Guitar Synth	92	Synth Lead	Guitar Synth
43	Fantasy Bell	Guitar Synth	93	Fantasy Bell	Guitar Synth
44	Monster Cry	Guitar Synth	94	Monster Cry	Guitar Synth
45	Synth+Guitar	Guitar Synth	95	Synth+Guitar	Guitar Synth
46	Slap Bass	Bass Multi	96	Slap Bass	Bass Multi
47	Mellow Bass	Bass Multi	97	Mellow Bass	Bass Multi
48	Metal Bass	Bass Multi	98	Metal Bass	Bass Multi
49	Synth Bass 1	Bass Synth	99	Synth Bass 1	Bass Synth

BLANK CHART

No.	NAME/Algorithm		No.	NAME/Algorithm		No.	NAME/Algorithm
1			51			101	Hall
2			52			102	Room 1
3			53			103	Room 2
4			54			104	Plate
5			55			105	Stereo Reverb
6			56			106	Gate Reverb
7			57			107	Ambience
8			58			108	Simple Delay
9			59			109	Mono Delay
10			60			110	Modulation Delay
11			61			111	Stereo Delay
12			62			112	20Tap Delay
13			63			113	Stereo Chorus
14			64			114	Band Chorus
15			65			115	Wave Chorus
16			66			116	Super Chorus
17			67			117	Pitch Shift
18			68			118	Stereo Pitch Shift
19			69			119	Stereo Phaser
20			70			120	Stereo Flanger
21			71			121	Vocoder 1
22			72			122	Vocoder 2
23			73			123	Keyboard Multi
24			74			124	Rotary Multi
25			75			125	Rhodes Multi
26			76			126	Guitar Multi 1
27			77			127	Guitar Multi 2
28			78			128	Guitar Multi 3
29			79			129	Guitar Multi 4
30			80			130	Bass Multi
31			81			131	Vocal Multi
32			82			132	Guitar Synth
33			83			133	Bass Synth
34			84			134	2ch Mixer
35			85			135	Hum Canceler
36			86			136	Vocal Canceler
37			87			137	Sampler 1
38			88			138	Sampler 2
39			89			139	Repeat Play
40			90			140	Hall+Room
41			91			141	Reverb+Delay
42			92			142	Reverb+Chorus
43			93			143	Reverb+Pitch Shift
44			94			144	Reverb+Gate
45			95			145	Delay+Chorus
46			96				
47			97				
48			98				
49			99				

MIDI PROGRAM CHANGE MAP

PC No.	Patch No./Name		PC No.	Patch No./Name		PC No.	Patch No./Name	
1			46			91		
2			47			92		
3			48			93		
4			49			94		
5			50			95		
6			51			96		
7			52			97		
8			53			98		
9			54			99		
10			55			100		
11			56			101		
12			57			102		
13			58			103		
14			59			104		
15			60			105		
16			61			106		
17			62			107		
18			63			108		
19			64			109		
20			65			110		
21			66			111		
22			67			112		
23			68			113		
24			69			114		
25			70			115		
26			71			116		
27			72			117		
28			73			118		
29			74			119		
30			75			120		
31			76			121		
32			77			122		
33			78			123		
34			79			124		
35			80			125		
36			81			126		
37			82			127		
38			83			128		
39			84					
40			85					
41			86					
42			87					
43			88					
44			89					

BOSS